SITE PLAN FOR:

SPRINGS AT PRAIRIE CROSSING

WAUKEE, IOWA

VICINITY MAP

NOT TO SCALE

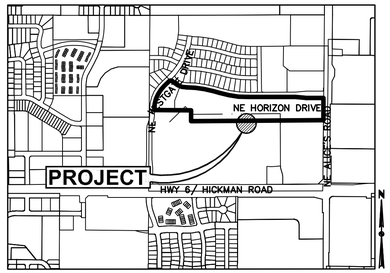

CITY OF WAUKEE

OWNER

CONTINENTAL 296 FUND LLC
ATTN: SARA JOHNSON
W134N8675 EXECUTIVE PARKWAY
MENOMONEE FALLS, WI 53051-3310
(262) 502-5500

ENGINEER

CIVIL DESIGN ADVANTAGE
ATTN: DOUG MANDERNACH
3405 SE CROSSROADS DRIVE, SUITE G
GRIMES, IOWA 50111
(515) 369-4400

SURVEYOR

CIVIL DESIGN ADVANTAGE
ATTN: MIKE BROONER
3405 SE CROSSROADS DRIVE, SUITE G
GRIMES, IOWA 50111
(515) 369-4400

CONSTRUCTION PROJECT MANAGER

CONTINENTAL 296 FUND LLC
ATTN: ANGELO EQUIZABAL
W134N8675 EXECUTIVE PARKWAY
MENOMONEE FALLS, WI 53051-3310
(262) 502-5500

LEGAL DESCRIPTION

LOT 1 PRAIRIE CROSSING PLAT 1, AN OFFICIAL PLAT IN WAUKEE, DALLAS COUNTY, IOWA.

PROPERTY IS SUBJECT TO ANY AND ALL EASEMENTS OF RECORD.

ZONING

R-3 RENTAL MULTI-FAMILY RESIDENTIAL DISTRICT

PROJECT SITE ADDRESS

750 NE HORIZON DRIVE

DEVELOPMENT SUMMARY

AREA: 21.134 ACRES (920,601 SF)

SETBACKS:
FRONT: = 30'
SIDE: 7' MIN. 15' TOTAL
REAR:
DWELLING= 30'
OTHERS= 40'

OPEN SPACE:

TOTAL SITE:	= 920,601 SF (21.13 AC.)
APARTMENT BUILDING	
(B4: 11,900) X(9)	= 107,100 SF
(B16:10,500) X(5)	= 52,500 SF
CLUBHOUSE	= 3,550 SF
MAIL KIOSK	= 96 SF
DRIVING/PARKING AREAS	= 226,442 SF
SIDEWALK	= 37,516 SF
TOTAL IMPERVIOUS	= 427,204 SF
OPEN SPACE REQUIRED	= 184,120 (20.0%)
OPEN SPACE PROVIDED	= 493,397 (53.6%)

UNITS:
260 UNITS

PARKING:

TOTAL REQUIRED: 2 SPACES/UNIT = 260 X 2	=520
1 VISITOR/5 DWELLINGS	= 52
TOTAL	=572
TOTAL PROVIDED:	
APARTMENTS:	
ATTACHED GARAGES:	=112
DETACHED GARAGES	= 31
TANDEM GARAGES	= 28
GARAGE APRON	= 84
SURFACE PARKING:	=317
CLUBHOUSE:	
SURFACE PARKING:	= 16
TOTAL STALLS	=588
TOTAL ACCESSIBLE PARKING:	=14 (2.38%)
VAN ACCESSIBLE:	=2

DATE OF SURVEY

NOVEMBER 1, 2013

BENCHMARKS

DALLAS COUNTY BENCHMARK G120 – 5/8" X6'-0' LONG ALUMINUM ROD WITH CAP STAMPED G120 ACCESS COVER 3" DEEP. LOCATED ON THE EAST SIDE OF 'U' PLACE ABOUT 150 FEET SOUTH OF 300TH STREET. – ELEVATION 1011.755

SUBMITTAL DATES

-SITE PLAN SUBMITTAL TO CITY #1:	11-12-13
-SITE PLAN SUBMITTAL TO CITY #2:	11-26-13
-SITE PLAN SUBMITTAL TO CITY #3:	12-10-13
-CITY COUNCIL SUBMITTAL	12-16-13

CONSTRUCTION SCHEDULE

ANTICIPATED START DATE = SPRING 2014
ANTICIPATED FINISH DATE = FALL 2015

INDEX OF SHEETS

CIVIL

C1.1	TITLE SHEET
PD-1 - PD-2	ALTA SURVEY
C3.0	OVERALL SITE PLAN, GENERAL NOTES
C3.1 - C3.3	DIMENSION PLAN
C4.1 - C4.9	UTILITY PLAN
C5.1 - C5.3	GRADING PLAN
C6.1 - C6.3	EROSION AND SEDIMENT CONTROL PLAN
C9.1 - C9.8	DETAILS

LANDSCAPE

L1.1 - L1.3	LANDSCAPE PLAN
L2.1	LANDSCAPE DETAILS

IOWA ONE CALL
1-800-292-8989 | 811
www.iowaonecall.com
Know what's below. Call before you dig.

UTILITY WARNING

THE UTILITIES SHOWN HAVE BEEN LOCATED FROM FIELD SURVEY AND RECORDS OBTAINED BY THIS SURVEYOR. THE SURVEYOR MAKES NO GUARANTEE THAT THE UTILITIES SHOWN COMPRISE ALL THE UTILITIES IN THE AREA, EITHER IN SERVICE OR ABANDONED. THE SURVEYOR FURTHER DOES NOT WARRANT THAT THE UTILITIES SHOWN ARE IN THE EXACT LOCATION SHOWN. A REQUEST WAS MADE TO IOWA ONE CALL FOR THE UTILITY PROVIDERS TO LOCATE THEIR UTILITIES IN THE FIELD.

CIVIL DESIGN ADVANTAGE
3405 SE CROSSROADS DR. SUITE G, GRIMES, IOWA 50111
PH: (515) 369-4400 Fax: (515) 369-4410
PROJECT NO. 1309.381

GENERAL LEGEND

PROPOSED

PROJECT BOUNDARY
LOT LINE
SECTION LINE
CENTER LINE
RIGHT OF WAY — R/W —
PERMANENT EASEMENT — P/E —
TEMPORARY EASEMENT — T/E —
TYPE M-A STORM INTAKE
TYPE M-B STORM INTAKE
TYPE M-C STORM INTAKE
TYPE M-D STORM INTAKE
TYPE M-E STORM INTAKE
TYPE M-G STORM INTAKE
TYPE A STORM MANHOLE
TYPE B STORM MANHOLE
TYPE A SANITARY MANHOLE
STORM/SANITARY CLEANOUT
WATER VALVE
FIRE HYDRANT ASSEMBLY
SIGN
DETECTABLE WARNING PANEL
STORM SEWER STRUCTURE NO. (ST-10)
STORM SEWER PIPE NO. (L-10)
SANITARY SEWER STRUCTURE NO. (S-10)
SANITARY SEWER PIPE NO. (P-10)
SANITARY SEWER WITH SIZE — 8"S —
SANITARY SERVICE — S — S — S —
STORM SEWER
STORM SERVICE — ST — ST —
WATERMAIN WITH SIZE — 8"W —
WATER SERVICE — W — W —
SAWCUT (FULL DEPTH)
SILT FENCE
TOP OF PROPOSED GRADE T.G.
USE AS CONSTRUCTED (U.A.C.)

EXISTING

SANITARY MANHOLE
WATER VALVE BOX
FIRE HYDRANT
WATER CURB STOP
WELL
STORM SEWER MANHOLE
STORM SEWER SINGLE INTAKE
STORM SEWER DOUBLE INTAKE
FLARED END SECTION
ROOF DRAIN/ DOWNSPOUT
DECIDUOUS TREE
CONIFEROUS TREE
DECIDUOUS SHRUB
CONIFEROUS SHRUB
ELECTRIC POWER POLE
GUY ANCHOR
STREET LIGHT
POWER POLE W/ TRANSFORMER
UTILITY POLE W/ LIGHT
ELECTRIC BOX
ELECTRIC TRANSFORMER
ELECTRIC MANHOLE OR VAULT
TRAFFIC SIGN
TELEPHONE JUNCTION BOX
TELEPHONE MANHOLE/VAULT
TELEPHONE POLE
GAS VALVE BOX
CABLE TV JUNCTION BOX
CABLE TV MANHOLE/VAULT
MAIL BOX
BENCHMARK
SOIL BORING
UNDERGROUND TV CABLE — TV —
GAS MAIN — G —
FIBER OPTIC — FO —
UNDERGROUND TELEPHONE — T —
OVERHEAD ELECTRIC — OE —
UNDERGROUND ELECTRIC — E —
FIELD TILE — TILE —
SANITARY SEWER W/ SIZE — 8"S —
STORM SEWER W/ SIZE — 15" RCP —
WATER MAIN W/ SIZE — 8"W —

THIS PROJECT REQUIRES AN IOWA NPDES PERMIT #2 AND CITY OF WAUKEE COSESCO PERMIT. CIVIL DESIGN ADVANTAGE WILL PROVIDE THE PERMITS AND THE INITIAL STORM WATER POLLUTION PREVENTION PLAN (SWPPP) FOR THE CONTRACTORS USE DURING CONSTRUCTION. THE CONTRACTOR SHALL BE RESPONSIBLE FOR UPDATING THE SWPPP THROUGHOUT CONSTRUCTION AND MEETING LOCAL, STATE AND FEDERAL REQUIREMENTS.

ALL CONSTRUCTION MATERIALS, DUMPSTERS, DETACHED TRAILERS OR SIMILAR ITEMS ARE PROHIBITED ON PUBLIC STREETS OR WITHIN THE PUBLIC R.O.W.

THIS DESIGN SPECIFICALLY PREPARED FOR USE AT THE LOCATION SHOWN. USE IN ANY OTHER MANNER EXCEEDS THE INTENDED PURPOSE OF THESE DRAWINGS AND ANY ACCOMPANYING SPECIFICATIONS.

I HEREBY CERTIFY THAT THIS ENGINEERING DOCUMENT WAS PREPARED BY ME OR UNDER MY DIRECT PERSONAL SUPERVISION AND THAT I AM A DULY LICENSED PROFESSIONAL ENGINEER UNDER THE LAWS OF THE STATE OF IOWA.

JOSHUA A. TROSTAD — 19228 — IOWA

JOSHUA A. TROSTAD, P.E. — DATE

MY LICENSE RENEWAL DATE IS DECEMBER 31, 2014
PAGES OR SHEETS COVERED BY THIS SEAL:
SHEETS

PRELIMINARY NOT FOR CONSTRUCTION

11-12-2013

SPRINGS AT PRAIRIE CROSSING

ALTA/ACSM SURVEY

VICINITY MAP
SCALE: NTS

OWNER/PREPARED FOR:

ALICE'S L.C.
5000 WESTOWN PARKWAY, SUITE 400
WEST DES MOINES, IA 50266-5921

SITE ADDRESS:

750 NE HORIZON DRIVE
WAUKEE, IA 50263

ENGINEER/SURVEYOR:

CIVIL DESIGN ADVANTAGE
3405 SE CROSSROADS DR, SUITE G
GRIMES, IOWA 50111

DATE OF SURVEY:

OCTOBER 26, 2013

ZONING CLASS:

R-3 (RENTAL MULTI-FAMILY RESIDENTIAL DISTRICT)

FLOOD ZONE DESIGNATION:

SUBJECT PROPERTY IS LOCATED IN UNSHADED ZONE X (AREA DETERMINED TO BE OUTSIDE OF THE 0.2% ANNUAL CHANCE FLOODPLAIN) AS SHOWN ON THE FLOOD INSURANCE RATE MAP, PANEL NUMBER 19049C0355E WITH A MAP REVISION OF DECEMBER 4, 2007.

BENCH MARK:

DALLAS COUNTY BENCHMARK G120 – 5/8" X6'-0' LONG ALUMINUM ROD WITH CAP STAMPED G120 ACCESS COVER 3"DEEP. LOCATED ON THE EAST SIDE OF 'U' PLACE ABOUT 150 FEET SOUTH OF 300TH STREET. – ELEVATION 1011.755

UTILITY WARNING:

THE UTILITIES SHOWN HAVE BEEN LOCATED FROM FIELD SURVEY AND RECORDERS OBTAINED BY THIS SURVEYOR. THE SURVEYOR MAKES NO GUARANTEE THAT THE UTILITIES SHOWN COMPRISE ALL THE UTILITIES IN THE AREA, EITHER IN SERVICE OR ABANDONED. THE SURVEYOR FURTHER DOES NOT WARRANT THAT THE UTILITIES SHOWN ARE IN THE EXACT LOCATION SHOWN. A REQUEST WAS MADE TO IOWA ONE CALL FOR THE UTILITIES TO LOCATE THEIR UTILITIES IN THE FIELD.

SCHEDULE B EXCEPTIONS:

COMMENTS LISTED BELOW ARE IN RESPONDS TO TITLE COMMITMENT NUMBER NCS-628042-MKE WITH AN EFFECTIVE DATE OF NOVEMBER 8, 2013

10. US WEST COMMUNICATION EASEMENT RECORDED IN BOOK 702, PAGE 23 – IS LOCATED ON THE SUBJECT PROPERTY.
13. MIDAMERICAN ENERGY COMPANY OPTION RECORDED IN BOOK 1999, PAGE 14128 – IS LOCATED ON THE SUBJECT PROPERTY.
15. SANITARY SEWER EASEMENT RECORDED IN BOOK 2000, PAGE 2135 – IS LOCATED OUTSIDE OF THE SUBJECT PROPERTY.
16. ELECTRIC EASEMENT RECORDED IN BOOK 2001, PAGE 1723 – IS LOCATED ON THE SUBJECT PROPERTY.
17. EASEMENT AND COVENANTS RECORDED IN BOOK 2006, PAGE 15927 AMENDED IN BOOK 2012, PAGE 6581 – IS LOCATED ON THE SUBJECT PROPERTY.
18. QWEST CORPORATION EASEMENT RECORDED IN BOOK 2006, PAGE 19329 – IS LOCATED OUTSIDE OF THE SUBJECT PROPERTY.
20. DEVELOPMENT AGREEMENT RECORDED IN BOOK 2007, PAGE 12839 AMENDED IN BOOK 2008, PAGE 11523 AND AMENDED IN BOOK 2012, PAGE 5668 – THE SUBJECT PROPERTY IS LOCATED WITHIN THE AGREEMENT.
21. EASEMENTS AND NOTES IN PRAIRIE CROSSING PLAT 1 ARE SHOWN ON THE SURVEY.
23. PUBLIC UTILITY EASEMENT RECORDED IN BOOK 2008, PAGE 7678 – IS LOCATED ON THE SUBJECT PROPERTY.
25. AGREEMENT TO COMPLETE IMPROVEMENTS RECORDED IN BOOK 2008, PAGE 9606 – AGREEMENT STATED EXPECTED IMPROVEMENT COMPLETION DATE OF MAY 1, 2009.
32. DEVELOPMENT AGREEMENT RECORDED IN BOOK 2008, PAGE 11529 – IS LOCATED OUTSIDE OF THE SUBJECT PROPERTY.
33. STORM SEWER EASEMENT RECORDED IN BOOK 2013, PAGE 20152–IS LOCATED ON THE SUBJECT PROPERTY.
34. LANDSCAPE BUFFER EASEMENT RECORDED IN BOOK 2013, PAGE 20153–IS LOCATED ON THE SUBJECT PROPERTY.
35. PUBLIC UTILITY EASEMENT RECORDED IN BOOK 2013, PAGE 20154–IS LOCATED ON THE SUBJECT PROPERTY.
36. SANITARY SEWER EASEMENT RECORDED IN BOOK 2013, PAGE 20155–IS LOCATED OUTSIDE OF THE SUBJECT PROPERTY.
37. OVERLAND FLOWAGE EASEMENT RECORDED IN BOOK 2013, PAGE 20156–IS LOCATED OUTSIDE OF THE SUBJECT PROPERTY.
38. SANITARY SEWER EASEMENT RECORDED IN BOOK 2013, PAGE 20157–IS LOCATED OUTSIDE OF THE SUBJECT PROPERTY.
39. TEMPORARY PRIVATE SEDIMENT BASIN EASEMENT RECORDED IN BOOK 2013, PAGE 20158–IS LOCATED OUTSIDE OF THE SUBJECT PROPERTY.
40. PRAIRIE CROSSING PLAT 1 STORM WATER MANAGEMENT FACILITY COVENANT AND PERMANENT EASEMENT AGREEMENT RECORDED IN BOOK 2013, PAGE 20159–IS LOCATED ON THE SUBJECT PROPERTY.

CERTIFICATION:

TO: ALICE'S, L.C., CONTINENTAL PROPERTIES COMPANY, INC., FIRST AMERICAN TITLE INSURANCE COMPANY, ITS SUCCESSORS AND/OR ASSIGNS OF ANY OF THE FOREGOING AND ANY OTHER PERSON WHO PURCHASES, MORTGAGES OR GUARANTEES THE TITLE THERETO WITHIN ONE YEAR OF THE DATE OF THIS SURVEY.

I HEREBY CERTIFY THAT THE SURVEY WAS PREPARED FROM AN ACTUAL ON-THE-GROUND INSTRUMENT SURVEY OF THE SUBJECT PREMISES; THAT THE SAME ACCURATELY SHOWS THE LOCATION OF THE BOUNDARIES OF THE SUBJECT PREMISES, ALL ITEMS MARKED IN TABLE A, AND THE LOCATION OF ALL STREETS, HIGHWAYS, ALLEYS AND PUBLIC WAYS CROSSING OR ABUTTING SAID PREMISES; THAT THE DIMENSIONS OF ANY IMPROVEMENTS AND THE LOCATION THEREOF WITH RESPECT TO THE BOUNDARIES ARE ACCURATELY SHOWN AS THE SAME WERE SITUATED ON OCTOBER 26, 2013; THAT THERE ARE NO ENCROACHMENTS BY IMPROVEMENTS APPURTENANT TO ADJOINING PREMISES UPON THE SUBJECT PREMISES, NOR FROM THE SUBJECT PREMISES UNLESS SHOWN HEREON; THAT ALL EASEMENTS AND RIGHTS OF WAY WHICH ARE APPURTENANT TO OR BURDEN THE SUBJECT PREMISES AND (i) ARE REFERRED TO IN THE TITLE COMMITMENT FOR THE SUBJECT PREMISES DATED FILE NUMBER NCS-628042-MKE DATED NOVEMBER 8, 2013; ISSUED BY FRIST AMERICAN TITLE INSURANCE COMPANY OR (ii) ARE APPARENT FROM A VISUAL INSPECTION, ARE DELINEATED HEREON; THAT THE SUBJECT PREMISES ARE NOT IN A 100-YEAR INTERVAL FLOOD PLAIN OR SPECIAL FLOOD HAZARD AREA, THAT A NON QUALIFIED PERSONNEL VISUALLY INSPECTED THE SUBJECT PREMISES AND NO WETLANDS ARE LOCATED ON THE SUBJECT PREMISES AND THAT, WITHOUT LIMITING THE FOREGOING, THIS SURVEY WAS MADE IN ACCORDANCE WITH "MINIMUM STANDARD DETAIL REQUIREMENTS FOR ALTA/ACSM LAND TITLE SURVEYS" JOINTLY ESTABLISHED AND ADOPTED BY ALTA ACSM AND NSPS IN 2011, PURSUANT TO THE ACCURACY STANDARDS AS ADOPTED BY ALTA AND NSPS AND IN EFFECT ON THE DATE OF THIS CERTIFICATION, UNDERSIGNED FURTHER CERTIFIES THAT IN MY PROFESSIONAL OPINION, AS A LAND SURVEYOR REGISTERED IN THE STATE OF IOWA, THE MAXIMUM RELATIVE POSITIONAL ACCURACY FOR THE SUBJECT BOUNDARY IS 0.13 FEET.

LEGAL DESCRIPTION:

LOT 1 IN PRAIRIE CROSSING PLAT 1, AN OFFICIAL PLAT, NOW INCLUDED IN AND FORMING A PART OF THE CITY OF WAUKEE, DALLAS COUNTY, IOWA.

LEGEND:

	FOUND	SET
SECTION CORNER AS NOTED	▲	△
1/2" REBAR, YELLOW CAP #16747 (UNLESS OTHERWISE NOTED)	●	○
PLATTED BEARING & DISTANCE	P	
MEASURED BEARING & DISTANCE	M	
RECORDED BEARING & DISTANCE	R	
DEEDED BEARING & DISTANCE	D	
MINIMUM PROTECTION ELEVATION	MPE	
PUBLIC UTILITY EASEMENT	P.U.E.	

CENTERLINE
SECTION LINE
EASEMENT LINE
TELEPHONE LINE (T)
CABLE TELEVISION LINE (TV)
FIBER OPTICS LINE (OF)
WATERMAIN (W)
STORM SEWER (ST)
SANITARY SEWER (S)
WOOD FENCE
GAS LINE (G)
ELECTRIC LINE (E)
OVERHEAD ELECTRIC LINE (OE)

GAS APPARATUS (P-TANK)
AIR CONDITIONER (AC)
TELEPHONE PEDESTAL
WATER VALVE
FIRE HYDRANT
ELECTRIC TRANSFORMER
ELECTRIC METER BOARD
MAIL BOX
SIGN
POWER POLE
TELEVISION PEDESTAL
SANITARY SEWER MANHOLE
STORM SEWER MANHOLE
ROUND STORM SEWER INTAKE
STORM SEWER INTAKE
FLAG POLE (FP)
SPRINKLER BOX (SB)
BUSH
CONIFEROUS TREE

GAS MANHOLE
MONITORING WELLS (MW)
FLARED END SECTION
TRAFFIC SIGNAL CONTROL (TR)
CLEANOUT
TRAFFIC LIGHT
SEPTIC TANK
YARD LIGHT (YL)
STREET LIGHT
DECIDUOUS TREE
HANDICAPPED PARKING
ROOF DRAIN (RD)
RIPRAP
OVERHEAD LIGHT

MICHAEL D. LEE
16747
LICENSED LAND SURVEYOR
IOWA

I HEREBY CERTIFY THAT THIS LAND SURVEYING DOCUMENT WAS PREPARED AND THE RELATED SURVEY WORK WAS PERFORMED BY ME OR UNDER MY DIRECT PERSONAL SUPERVISION AND THAT I AM A DULY LICENSED LAND SURVEYOR UNDER THE LAWS OF THE STATE OF IOWA.

MICHAEL D. LEE, P.L.S. DATE

MY LICENSE RENEWAL DATE IS DECEMBER 31, 2014
PAGES OR SHEETS COVERED BY THIS SEAL:
SHEET ONE AND TWO

3405 SE Crossroads Drive, Suite G
GRIMES, IOWA 50111-5051
PH: (515) 369-4400 Fax: (515) 369-4410
CIVIL DESIGN ADVANTAGE

CONTINENTAL 252 FUND LLC
An affiliate of
CONTINENTAL PROPERTIES COMPANY, INC.
W134 N8675 Executive Parkway
Menomonee Falls, WI 53052
Phone: 262-502-5500 Fax: 262-502-5522
Email: cad_dwg@cproperties.com

CITY: Waukee
STREET: NE Horizon Drive
STATE: IA
DRAWN BY: MDL
INITIAL DATE DRAWN: 11/5/13

REVISIONS

REV	DATE	DESCRIPTION

NORTH
REV: 0
SHEET: PD-1

ALTA/ACSM SURVEY

NE WESTGATE DRIVE

NE HORIZON DRIVE

D=87°10'49"(M)
D=87°10'50" (P)
L=38.04' (M&P)
R=25.00' (M&P)
CH=34.47' (M&P)
S89°20'06"E (M)
S89°14'00"E (P)

S45°44'41"E 22.26' (M)
S45°38'36"E 22.26' (P)

D=44°01'46" (M&P)
L=219.01' (M&P)
R=285.00' (M&P)
CH=213.66' (M&P)
S67°45'34"E (M)
S67°39'29"E (P)

D=15°47'31" (M&P)
L=403.79' (M&P)
R=1465.00' (M&P)
CH=402.51' (M&P)
S81°52'42"E (M)
S81°46'37"E (P)

D=16°06'43" (M&P)
L=431.65' (M&P)
R=1535.00' (M&P)
CH=430.23' (M&P)
S82°02'18"E (M)
S81°56'12"E (P)

D=47°00'00" (M&P)
L=381.44' (M&P)
R=465.00' (M&P)
CH=370.84' (M&P)
N23°34'30"E (M)
N23°40'35"E (P)

N47°04'30"E 107.84' (M)
N47°10'35"E 107.84'(P)

S73°58'56"E 94.88' (M)
S73°52'54"E 94.88' (P)

N0°04'30"E 20.51' (M)
N00°10'35"E 20.51' (P)

N89°55'30"W 545.00' (M)
N89°49'25"W 545.00' (P)

N0°04'30"E 161.78' (M)
N00°10'35"E 161.78' (P)

S89°33'35"W 1957.14' (M)
S89°39'40"W 1957.14' (P)

RIM=1026.47
12"CMP FL(SW)=1022.16
12"CMP FL(NE)=1022.16
15"RCP FL(NW)=1021.54

RIM=1026.88

GUTT=1025.79
15"RCP FL(SE)=1021.28

GUTT=1025.62
15"RCP FL(SE)=1020.83
15"RCP FL(NW)=1020.79

RIM=1027.76

RIM=1027.54
15"RCP
FL(NE)=1023.12

30"RCP FES
FL=1019.74

RIM=1027.00
INVERT FL(W)=1019.88
INVERT FL(SW)=1018.96
INVERT FL(E)=1018.80

FND 5/8" REBAR
CAP #7844

RIM=1026.24
INVERT =1017.93

RIM=1026.65
INVERT =1019.62

PUBLIC STORM SEWER AND
DETENTION BASIN EASEMENT
BK 2013, PG 20159
40

35
10.00' PUE
BK 2013,
PG 20154

GUTT=1025.92
24"RCP
FL(E)=1021.77

GUTT=1025.85
24"RCP FL(E)=1021.08
24"RCP FL(W)=1021.15

60"RCP FES
FL=1019.26

RIM=1027.57
24"RCP FL(W)=1019.68
60"RCP FL(SE)=1019.47
60"RCP FL(NE)=1019.37

SW COR LOT 1

MANHOLE BURIED

30.00' PUBLIC SANITARY
SEWER EASEMENT
BK 2013, PG 20155
36

RIM=1027.21
8"RCP FL(W)=1014.36

FND 5/8" REBAR
CAP #7844

GUTT=1024.14
15"RCP FL(S)=1019.31

GUTT=1024.16
15"RCP FL(N)=1019.11
6"SD FL(S)=1021.86
15"RCP FL(S)=1019.06

GUTT=1022.26
15"RCP FL(S)=1017.41

GUTT=1022.34
15"RCP FL(NE)=1017.18
6"SD FL(SW)=1020.03
6"SD FL(SW)=1020.03
15"RCP FL(SW)=1017.25

RIM=1024.08
INVERT =1015.84

FND 5/8" REBAR
CAP #7844

GUTT=1020.30
15"RCP FL(S)=1015.80

GUTT=1020.34
15"RCP FL(NE)=1015.22
6"SD FL(SW)=1018.18
6"SD FL(SW)=1018.18
15"RCP FL(SW)=1015.13

GUTT=1018.22
15"RCP FL(S)=1012.19

GUTT=1018.31
36"RCP FL(N)=1010.86
6"SD FL(S)=1016.30
6"SD FL(S)=1016.30
36"RCP FL(S)=1010.94

10.00' PUE
BK 2013,
PAGE 20154
35

20.00' PUBLIC
STORM SEWER
EASEMENT
BK 2013, PG 20152
33

RIM=1022.04
INVERT =1013.28

FND 5/8" REBAR
CAP #7844

RIM=1019.50
INVERT =1010.81

CROP LIMIT LINE

LOT 1,
PRAIRIE CROSSING
PLAT 1

PT. OUTLOT 'Y',
PRAIRIE CROSSING
PLAT 1
ALICE'S LC

30.00' LANDSCAPE
BUFFER EASEMENT
BK 2013, PG 20153
34

PT. OUTLOT 'Y',
PRAIRIE CROSSING
PLAT 1
ALICE'S LC

MATCH LINE SEE SHEET PD-1

LEGEND:

	FOUND	SET
SECTION CORNER AS NOTED	▲	△
1/2" REBAR, YELLOW CAP #16747 (UNLESS OTHERWISE NOTED)	●	○
PLATTED BEARING & DISTANCE	P	
MEASURED BEARING & DISTANCE	M	
RECORDED BEARING & DISTANCE	R	
DEEDED BEARING & DISTANCE	D	
MINIMUM PROTECTION ELEVATION	MPE	
PUBLIC UTILITY EASEMENT	P.U.E.	
CENTERLINE		
SECTION LINE		
EASEMENT LINE		
TELEPHONE LINE	T	
CABLE TELEVISION LINE	TV	
FIBER OPTICS LINE	OF	
WATERMAIN	W	
STORM SEWER	ST	
SANITARY SEWER	S	
WOOD FENCE		
GAS LINE	G	
ELECTRIC LINE	E	
OVERHEAD ELECTRIC LINE	OE	

GAS APPARATUS	P-TANK	GAS MANHOLE	G
AIR CONDITIONER	AC	MONITORING WELLS	MW
TELEPHONE PEDESTAL	T	FLARED END SECTION	
WATER VALVE	W	TRAFFIC SIGNAL CONTROL	TR
FIRE HYDRANT	D	CLEANOUT	
ELECTRIC TRANSFORMER	E	TRAFFIC LIGHT	
ELECTRIC METER BOARD	E	SEPTIC TANK	S
MAIL BOX	M	YARD LIGHT	
SIGN		STREET LIGHT	
POWER POLE		DECIDUOUS TREE	
TELEVISION PEDESTAL	TV	HANDICAPPED PARKING	
SANITARY SEWER MANHOLE	S	ROOF DRAIN	RD
STORM SEWER MANHOLE	ST	RIPRAP	
ROUND STORM SEWER INTAKE		OVERHEAD LIGHT	
STORM SEWER INTAKE			
FLAG POLE			
SPRINKLER BOX	SPR		
BUSH			
CONIFEROUS TREE			

0 25' 50' 100'

3405 SE Crossroads Drive, Suite G
GRIMES, IOWA 50111-5051
PH: (515) 369-4400 Fax: (515) 369-4410

CIVIL DESIGN ADVANTAGE

CONTINENTAL 296 FUND LLC
An affiliate of
CONTINENTAL PROPERTIES COMPANY, INC.
Waukee Financial Center
1601 Northwest Base Line
Waukee, Iowa 50263-9221
Phone: 515.987.1099

DRAWN BY:	DATE:
MDL	11/5/13

STATE:	DESCRIPTION:	DATE:
IA	INITIAL SUBMITTAL	

REVISIONS

NO.	DESCRIPTION	DATE
1		
2		
3		

CITY: Waukee
TITLE: NE Horizon Drive

NORTH

REV: 0

SHEET: PD-2

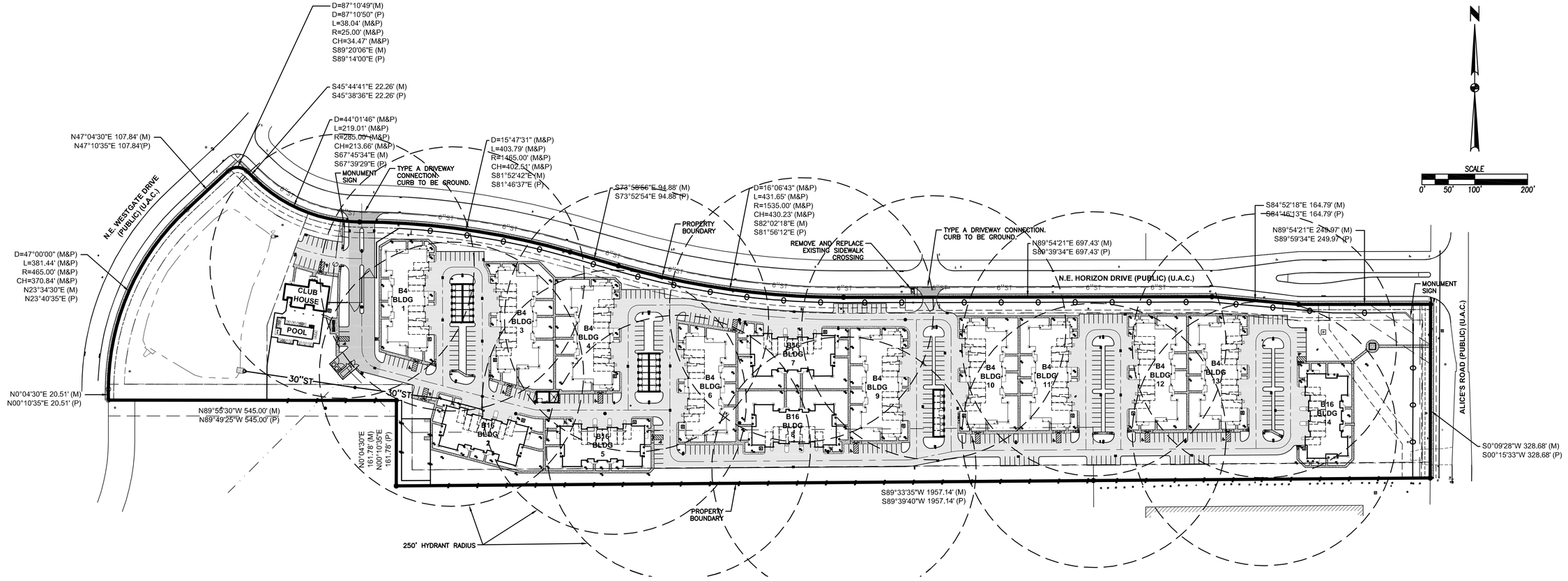

GENERAL NOTES

1. WHERE PUBLIC UTILITY FIXTURES ARE SHOWN AS EXISTING ON THE PLANS OR ENCOUNTERED WITHIN THE CONSTRUCTION AREA, IT SHALL BE THE RESPONSIBILITY OF THE CONTRACTOR TO NOTIFY THE OWNERS OF THOSE UTILITIES PRIOR TO THE BEGINNING OF ANY CONSTRUCTION. THE CONTRACTOR SHALL AFFORD ACCESS TO THESE FACILITIES FOR NECESSARY MODIFICATION OF SERVICES. UNDERGROUND FACILITIES, STRUCTURES AND UTILITIES HAVE BEEN PLOTTED FROM AVAILABLE SURVEYS AND RECORDS, AND THEREFORE, THEIR LOCATIONS MUST BE CONSIDERED APPROXIMATE ONLY. IT IS POSSIBLE THERE MAY BE OTHERS. THE EXISTENCE OF WHICH IS PRESENTLY NOT KNOWN OR SHOWN. IT IS THE CONTRACTORS RESPONSIBILITY TO DETERMINE THEIR EXISTENCE AND EXACT LOCATIONS AND TO AVOID DAMAGE THERETO. NO CLAIMS FOR ADDITIONAL COMPENSATION WILL BE ALLOWED TO THE CONTRACTOR FOR ANY INTERFERENCE OR DELAY CAUSED BY SUCH WORK.

   THE CONTRACTOR IS REQUIRED TO UTILIZE THE UTILITY ONE-CALL SERVICE AT 800-292-8989 AT LEAST 48 HOURS PRIOR TO EXCAVATING ANYWHERE ON THE PROJECT.

2. THE CONTRACTOR SHALL NOTIFY THE CITY OF WAUKEE TO SET UP A PRE-CONSTRUCTION MEETING AT LEAST ONE WEEK PRIOR TO ANY WORK BEGINNING ON THE SITE. THE CONTRACTOR SHALL CONTACT THE DEVELOPMENT SERVICES DEPARTMENT AT LEAST 72 HOURS PRIOR TO ANY PLANNED WEEKEND OR HOLIDAY WORK.

3. THE CONTRACTOR IS RESPONSIBLE FOR REPLACING ANY AREAS OF PAVEMENT OR SIDEWALK NOT TO BE REMOVED THAT IS DAMAGED DUE TO OPERATING HIS EQUIPMENT ON THE PAVEMENT OR SIDEWALK. THE CONTRACTOR WILL REPLACE ANY AND ALL EXISTING LAWNS DISTURBED BY CONSTRUCTION WITH SOD.

4. THE GENERAL CONTRACTOR SHALL BE RESPONSIBLE FOR THE COORDINATION OF WORK BETWEEN ALL SUPPLIERS AND SUBCONTRACTORS INVOLVED IN THE PROJECT. INCLUDING STAGING OF CONSTRUCTION DETAILS.

5. THE CONTRACTOR SHALL APPLY NECESSARY MOISTURE TO THE CONSTRUCTION AREA AND HAUL ROADS TO PREVENT THE SPREAD OF DUST.

6. THE CONTRACTOR MAY BE REQUIRED AS DIRECTED BY THE ENGINEER OR THE CITY, TO PLACE TEMPORARY WARNING DEVICES AND SAFETY FENCE AT CERTAIN LOCATIONS WHERE REPLACEMENT FEATURES ARE NOT INSTALLED THE SAME DAY. THIS WILL BE INCIDENTAL TO THE PROJECT BID.

7. TO OBTAIN THE CORRECT FORM GRADES AT LOW POINTS WHERE INTAKES ARE LOCATED, THE CONTRACTOR MUST EXERCISE ADDITIONAL CARE WHEN PAVING FULL WIDTH PAVEMENTS. THIS MAY REQUIRE POURING ONE HALF OF THE PAVEMENT AT A TIME OR OTHER METHODS APPROVED BY THE ENGINEER.

8. THE CONTRACTOR SHALL CONFINE HIS GRADING OPERATIONS TO WITHIN THE PROJECT SITE AND EASEMENTS SHOWN ON THE PLANS.

9. PLAN AND PROFILE SHEETS INCLUDED IN THE PROJECT ARE FOR THE PURPOSE OF ALIGNMENT, LOCATION AND SPECIFIC DIRECTIONS FOR WORK TO BE PERFORMED UNDER THIS CONTRACT. IRRELEVANT DATA ON THESE SHEETS IS NOT TO BE CONSIDERED A PART OF THIS CONTRACT.

10. THE CONTRACTOR IS REQUIRED TO BE FAMILIAR WITH AND COMPLY WITH OSHA STANDARDS. NOTHING WITHIN THESE PLANS SHALL RELIEVE THE CONTRACTOR OF THIS REQUIREMENT.

11. CIVIL DESIGN ADVANTAGE WILL PROVIDE ALL CONSTRUCTION STAKING ON THIS PROJECT. NOTIFY MIKE BROONER (369-4400) A MINIMUM OF 48 HOURS BEFORE CONSTRUCTION STAKES ARE REQUIRED.

12. THE CONTRACTOR IS RESPONSIBLE FOR INSTALLATION AND MAINTENANCE OF ALL EROSION CONTROL MEASURES REQUIRED ON THE STORM WATER POLLUTION PREVENTION PLAN.

13. AN AS-BUILT SITE PLAN (IN PDF FORM AND HARD COPY) IS TO BE PROVIDED TO THE CITY OF WAUKEE UPON THE COMPLETION OF ALL SITE IMPROVEMENTS VERIFYING THE CONSTRUCTED LOCATION OF ALL SITE UTILITIES AND GRADING OVER FLOW ROUTES.

14. THE CONTRACTOR IS TO PROVIDE AN UPDATED SITE PLAN AND DETAIL INFORMATION FOR ANY CHANGES TO THE SITE PLAN AND RECEIVE WRITTEN APPROVAL OF SAID CHANGE(S) FROM THE CITY OF WAUKEE DEVELOPMENT SERVICES DEPARTMENT PRIOR TO EXECUTING THE CHANGE. THE CONTRACTOR IS RESPONSIBLE FOR ANY CHANGES IMPLEMENTED WITHOUT RECEIVING WRITTEN APPROVAL FROM THE CITY.

15. ALL HYDRANTS ARE TO HAVE STORZ FITTINGS.

16. ALL MAIN SANITARY AND STORM SEWERS ARE TO BE CLEANED AND TELEVISED. A COPY OF THE VIDEO IS TO BE PROVIDED TO THE CITY OF WAUKEE ENGINEERING DEPARTMENT.

17. ALL UTILITIES ARE TO BE TESTED TO MEET CITY OF WAUKEE STANDARDS.

18. ALL PUBLIC UTILITY TIE-INS ARE TO BE COORDINATED WITH THE CITY OF WAUKEE ENGINEERING DEPARTMENT.

19. ALL DEBRIS SPILLED ONTO THE PUBLIC RIGHT OF WAY IS TO BE CLEANED BY THE CONTRACTOR AT THE END OF EACH WORK DAY OR PRIOR TO A STORM EVENT.

20. THE INSTALLATION OF ALL PUBLIC WALKS IS REQUIRED PRIOR TO THE ISSUANCE OF A CERTIFICATE OF OCCUPANCY.

REVISIONS	DATE
CITY COUNCIL SUBMITTAL #3	12-16-13
SITE PLAN SUBMITTAL #3	12-10-13
SITE PLAN SUBMITTAL #2	11-26-13
SITE PLAN SUBMITTAL #1	11-12-13

3405 S.E. CROSSROADS DRIVE, SUITE G
GRIMES, IOWA 50111
PHONE: (515) 369-4400 FAX: (515) 369-4410

ENGINEER: JAT | TECH: DAM

CIVIL DESIGN ADVANTAGE

SPRINGS AT PRAIRIE CROSSING

WAUKEE, IOWA

OVERALL SITE PLAN

C3.0

1309.381

FILE: N:\2013\1309381\DWG\1309381-SITE.DWG
PLOT STYLE TABLE: CDA.CTB LAYOUT: C3.0 SITE PLAN
PLOTTED BY: DOUG MANDERNACH DATE PLOTTED: 12/16/2013 1:55 PM COMMENT: TECH: ENG

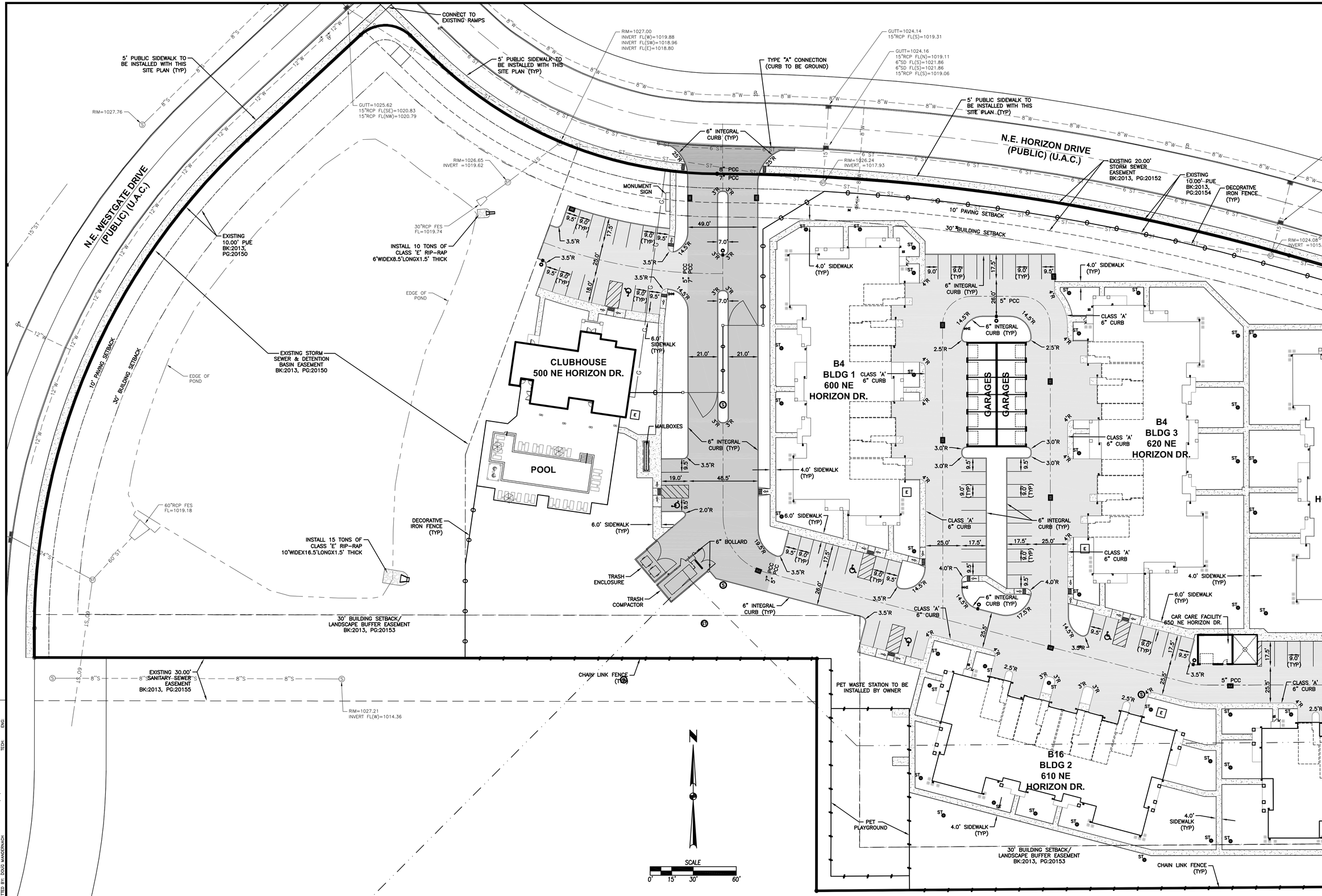

REVISIONS	DATE
CITY COUNCIL SUBMITTAL #3	12-16-13
SITE PLAN SUBMITTAL #3	12-10-13
SITE PLAN SUBMITTAL #2	11-26-13
SITE PLAN SUBMITTAL #1	11-12-13

3405 S.E. CROSSROADS DRIVE, SUITE G
GRIMES, IOWA 50111
PHONE: (515) 369-4400 FAX: (515) 369-4410
ENGINEER: JAT
TECH: DAM
CIVIL DESIGN ADVANTAGE

SPRINGS AT PRAIRIE CROSSING

DIMENSION PLAN

WAUKEE, IOWA

C3.1

1309.381

FILE: H:\2013\1309381\DWG\1309381-SITE.DWG
FILE DATE: 12/16/13 DATE PLOTTED: 12/16/2013 1:54 PM
PLOTTED BY: DOUG MANDERNACH
COMMENT:
TECH: ENG:

GUTT=1022.26
15"RCP FL(S)=1017.41

GUTT=1022.34
15"RCP FL(NE)=1017.18
6"SD FL(SW)=1020.03
6"SD FL(SW)=1020.03
15"RCP FL(SW)=1017.25

RIM=1024.08
INVERT =1015.84

5' PUBLIC SIDEWALK TO BE INSTALLED WITH THIS SITE PLAN (TYP)

DECORATIVE IRON FENCE (TYP)

GUTT=1020.30
15"RCP FL(S)=1015.80

GUTT=1020.34
15"RCP FL(NE)=1015.22
6"SD FL(SW)=1018.18
6"SD FL(SW)=1018.18
15"RCP FL(SW)=1015.13

EXISTING 20.00' STORM SEWER EASEMENT BK:2013, PG:20152

NE HORIZON DRIVE (PUBLIC) (U.A.C.)

GUTT=1018.22
15"RCP FL(S)=1012.19

GUTT=1018.31
36"RCP FL(N)=1010.86
6"SD FL(S)=1016.30
6"SD FL(S)=1016.30
36"RCP FL(S)=1010.94

RIM=1020.61
8"PVC FL(N)=1004.26
8"PVC FL(E)=1004.09

RIM=1019.50
INVERT =1010.81

TYPE "A" CONNECTION (CURB TO BE GROUND)

EXISTING 25.00' SANITARY & STORM SEWER EASEMENT BK:2013, PG:20157

EXISTING 10.00' PUE BK:2013, PG:20154

10' PAVING SETBACK

30' BUILDING SETBACK

8" PCC

5" PCC

6" INTEGRAL CURB (TYP)

CLASS 'A' 6" INTEGRAL CURB

CLASS 'A' 6" CURB

4.0' SIDEWALK (TYP)

6.0' SIDEWALK (TYP)

B4
BLDG 4
680 NE
HORIZON DR.

GARAGES
690 NE
HORIZON DR.

B4
BLDG 6
700 NE
HORIZON DR.

B16
BLDG 7
760 NE HORIZON DR.

B16
BLDG 8
740 NE HORIZON DR.

B4
BLDG 9
780 NE
HORIZON DR.

GARAGES
800 NE HORIZON DR.

B4
BLDG 10
820 NE
HORIZON DR.

B16
BLDG 5
660 NE HORIZON DR.

30' BUILDING SETBACK/
LANDSCAPE BUFFER EASEMENT
BK:2013, PG:20153

CHAIN LINK FENCE (TYP)

SCALE
0' 15' 30' 60'

N

REVISIONS	DATE
CITY COUNCIL SUBMITTAL #3	12-16-13
SITE PLAN SUBMITTAL #3	12-10-13
SITE PLAN SUBMITTAL #2	11-26-13
SITE PLAN SUBMITTAL #1	11-12-13

3405 S.E. CROSSROADS DRIVE, SUITE G
GRIMES, IOWA 50111
PHONE: (515) 369-4400 FAX: (515) 369-4410

ENGINEER: JAT | TECH: DAM

CIVIL DESIGN ADVANTAGE

SPRINGS AT PRAIRIE CROSSING

DIMENSION PLAN

WAUKEE, IOWA

C3.2

1309.381

FILE: H:\2013\1309381\DWG\1309381-SITE.DWG
LAST PLOTTED: 12/16/2013 1:54 PM
PLOTTED BY: DOUG MANDERNACH

COMMENT:
TECH: ENG:

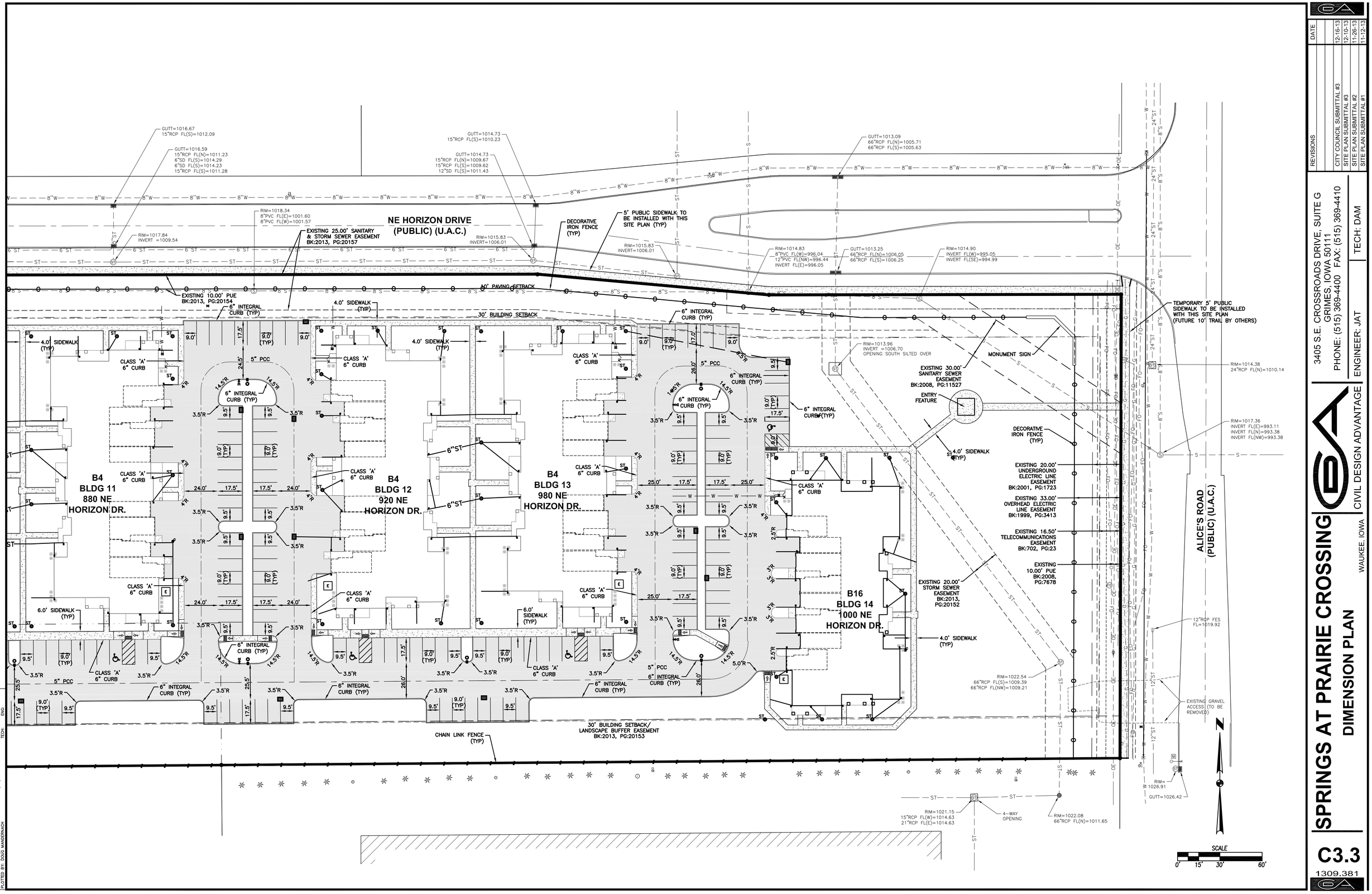

REVISIONS	DATE
CITY COUNCIL SUBMITTAL #3	12-16-13
SITE PLAN SUBMITTAL #3	12-10-13
SITE PLAN SUBMITTAL #2	11-26-13
SITE PLAN SUBMITTAL #1	11-12-13

3405 S.E. CROSSROADS DRIVE, SUITE G
GRIMES, IOWA 50111
PHONE: (515) 369-4400 FAX: (515) 369-4410
ENGINEER: JAT
TECH: DAM
CIVIL DESIGN ADVANTAGE

SPRINGS AT PRAIRIE CROSSING
DIMENSION PLAN

WAUKEE, IOWA

C3.3

1309.381

N.E. WESTGATE DRIVE (PUBLIC) (U.A.C.)

N.E. HORIZON DRIVE (PUBLIC) (U.A.C.)

RIM=1027.76

RIM=1027.00
INVERT FL(W)=1019.88
INVERT FL(SW)=1018.96
INVERT FL(E)=1018.80

GUTT=1025.62
15"RCP FL(SE)=1020.83
15"RCP FL(NW)=1020.79

GUTT=1024.14
15"RCP FL(S)=1019.31

GUTT=1024.16
15"RCP FL(N)=1019.11
6"SD FL(S)=1021.86
6"SD FL(S)=1021.86
15"RCP FL(S)=1019.06

RIM=1026.65
INVERT =1019.62

RIM=1026.24
INVERT =1017.93

RIM=1024.68
INVERT =1019.84

30"RCP FES
FL=1019.74

INSTALL 10 TONS OF CLASS 'E' RIP-RAP 6'WIDEX8.5'LONGX1.5' THICK

EDGE OF POND

60"RCP FES
FL=1019.18

INSTALL 15 TONS OF CLASS 'E' RIP-RAP 10'WIDEX16.5'LONGX1.5' THICK

CONNECT TO EXISTING WATER SERVICE STUB W/8" TEE & 6" REDUCER

6" VALVE

8"X6" TEE

8" TEE

8" VALVE

45° BEND

(FH1) FIRE HYDRANT ASSEMBLY FGH=

6" FIRE SERVICE 3" WATER SERVICE

94 LF 2" WATER SERVICE

GAS SERVICE METER

2" WATER SERVICE 6"FL=1024.00

66 LF OF 6" SAN SERVICE (2% MIN)

SAN MH RIM=1029.02 FL(S)=1020.87

8"FL= 1020.54

6"FL= 1022.42

55 LF OF 6" SAN SERVICE (2% MIN)

122 LF OF 8" SAN @ 2.00%

(FH2) FIRE HYDRANT ASSEMBLY FGH=

(FH3) FIRE HYDRANT ASSEMBLY FGH=

6"FL=1025.50

87 LF OF 6" SAN SERVICE (2% MIN)

1,000 GALLON SAND OIL SEPARATOR

22.5° OF 6" SAN

159 LF OF 8" SAN @ 0.70%

11.25° BEND

8"FL= 1019.10

298 LF OF 8" SAN @ 0.70%

8"FL= 1018.61

17 LF OF 6" SAN SERVICE (2% MIN)

6"FL=1023.00

SAN MH RIM=1027.74 FL(W)=1018.92 FL(E)=1019.02

SAN MH RIM=1027.50 FL(SW)=1016.26 FL(E)=1016.83 FL(N)=1018.23

92 LF OF 8" SAN @ 0.70

193 LF OF 8" SAN @ 0.60%

CORE DRILL OPENING INTO EXISTING MANHOLE AND INSTALL LINK SEAL FOR WATERTIGHT CONNECTION. FL(E)=1014.36

EXISTING 30.00' SANITARY SEWER EASEMENT BK:2013, PG:20150

RIM=1027.21
INVERT FL(W)=1014.36
(UAC)

SAN MH RIM=1032.28 FL(W)=1015.52 FL(NE=1015.62

CC 1 CC 2 CC 3 CC 4 CC 5 CC 6 CC 7 CC 8 CC 9 CC 10 CC 11 CC 12 CC 13 CC 14

NOTES

1. CORE DRILL OPENING INTO EXISTING MANHOLE (S-EX1) AND INSTALL LINK SEAL FOR WATERTIGHT CONNECTION.
2. ALL EXISTING BLOW-OFF HYDRANTS ARE TO BE REMOVED.
3. THE CONTRACTOR IS REQUIRED TO CONTACT ALL APPLICABLE UTILITIES 48 HOURS PRIOR TO ANY WORK BEING DONE IN THE UTILITY EASEMENTS ALONG NE ALICES ROAD.

N

SCALE
0' 15' 30' 60'

FILE: H:\2013\1309381\UPWG\1309381-SITE.DWG
RE-SAVED: 12/18/2013 1:53 PM COMMENT:
PLOTTED BY: DOUG MANDERNACH TECH:
ENG:

REVISIONS	DATE
CITY COUNCIL SUBMITTAL #3	12-16-13
SITE PLAN SUBMITTAL #3	12-10-13
SITE PLAN SUBMITTAL #2	11-26-13
SITE PLAN SUBMITTAL #1	11-12-13

3405 S.E. CROSSROADS DRIVE, SUITE G
GRIMES, IOWA 50111
PHONE: (515) 369-4400 FAX: (515) 369-4410

ENGINEER: JAT | TECH: DAM

CIVIL DESIGN ADVANTAGE
WAUKEE, IOWA

SPRINGS AT PRAIRIE CROSSING

UTILITY PLAN

C4.1

1309.381

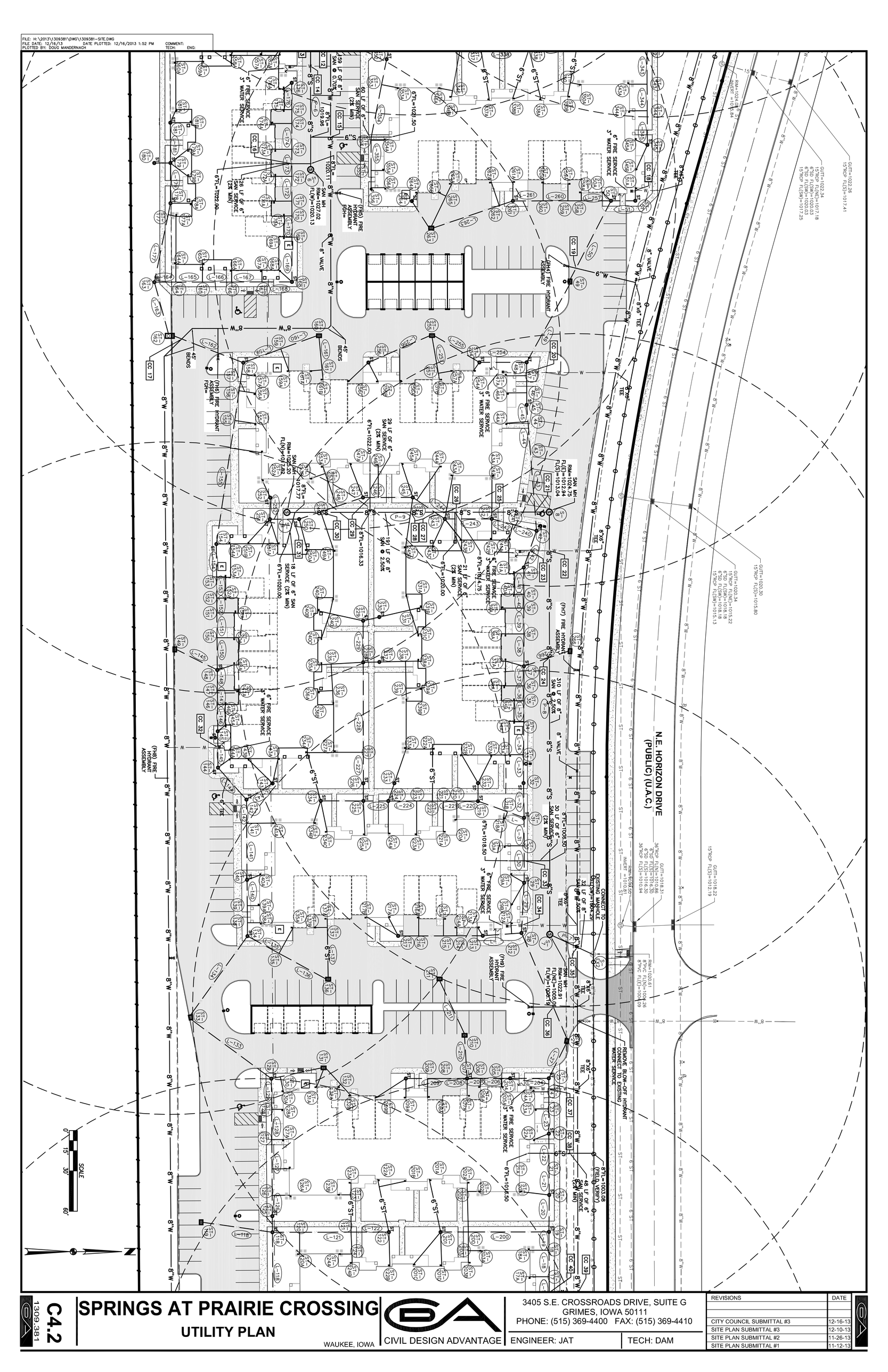

SPRINGS AT PRAIRIE CROSSING

UTILITY PLAN

C4.2

1309.381

WAUKEE, IOWA

CIVIL DESIGN ADVANTAGE

3405 S.E. CROSSROADS DRIVE, SUITE G
GRIMES, IOWA 50111
PHONE: (515) 369-4400 FAX: (515) 369-4410

ENGINEER: JAT

TECH: DAM

REVISIONS	DATE
CITY COUNCIL SUBMITTAL #3	12-16-13
SITE PLAN SUBMITTAL #3	12-10-13
SITE PLAN SUBMITTAL #2	11-26-13
SITE PLAN SUBMITTAL #1	11-12-13

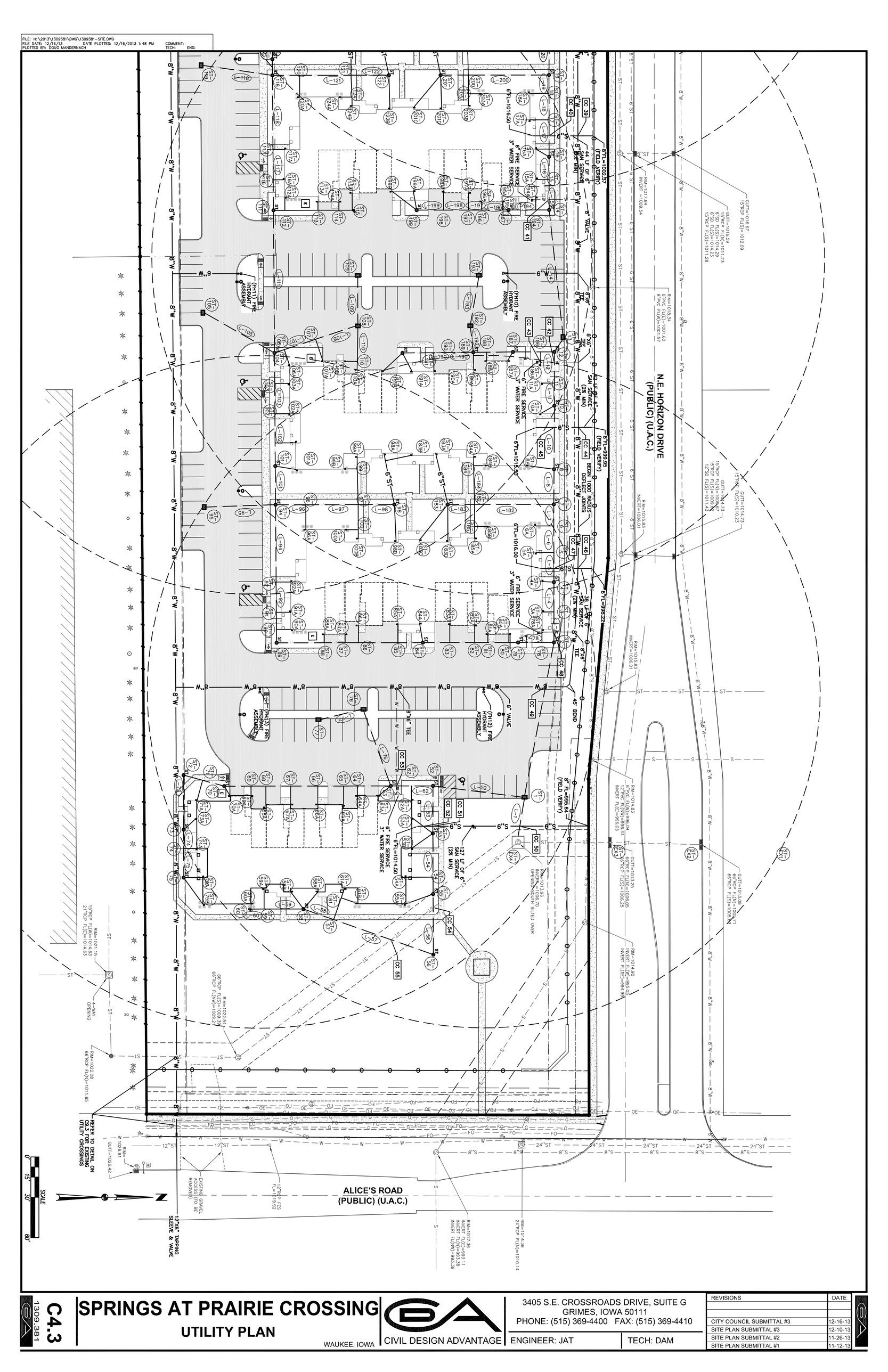
FILE: H:\2013\1309381\DWG\1309381-SITE.DWG
FILE DATE: 12/16/13 DATE PLOTTED: 12/16/2013 1:48 PM COMMENT:
PLOTTED BY: DOUG MANDERNACH TECH: ENG:
N.E. HORIZON DRIVE
(PUBLIC) (U.A.C.)
ALICE'S ROAD
(PUBLIC) (U.A.C.)
(FH10) FIRE HYDRANT ASSEMBLY
(FH11) FIRE HYDRANT ASSEMBLY
(FH12) FIRE HYDRANT ASSEMBLY
(FH13) FIRE HYDRANT ASSEMBLY
6"FL=1015.50
6"FL=1016.00
6"FL=1016.50
6"FL=1014.50
8"FL=1002.57 (FIELD VERIFY)
8"FL=999.95 (FIELD VERIFY)
8"FL=998.22 (FIELD VERIFY)
8"FL=998.27 (FIELD VERIFY)
3" FIRE SERVICE 3" WATER SERVICE
6" FIRE SERVICE 6" WATER SERVICE
8" VALVE
8"X6" TEE
45° BEND
44 LF OF 8" SAN SERVICE (2% MIN)
38 LF OF 8" SAN SERVICE (2% MIN)
127 LF OF 8" SAN SERVICE (2% MIN)
BEGIN 1000 RADIUS CURVE POINTS
4-WAY OPENING
SLOPE TO OPENING
REFER TO DETAIL ON C8.3 FOR EXISTING UTILITY CROSSINGS
12"X8" TAPPING SLEEVE & VALVE
EXISTING GRAVEL ACCESS TO BE REMOVED
SCALE
0
15'
30'
60'
C4.3
1309.381
SPRINGS AT PRAIRIE CROSSING
UTILITY PLAN
WAUKEE, IOWA
CIVIL DESIGN ADVANTAGE
3405 S.E. CROSSROADS DRIVE, SUITE G
GRIMES, IOWA 50111
PHONE: (515) 369-4400 FAX: (515) 369-4410
ENGINEER: JAT
TECH: DAM
REVISIONS
DATE
CITY COUNCIL SUBMITTAL #3 12-16-13
SITE PLAN SUBMITTAL #3 12-10-13
SITE PLAN SUBMITTAL #2 11-26-13
SITE PLAN SUBMITTAL #1 11-12-13

List of Intakes and Utility Accesses

Structure Number ST-#	Location NORTHING	Location EASTING	Type or Standard Road Plan	Form Grade/Rim Elevation	Note
ST- EX1			EX 66" RCP APRON	FL= 1004.93	
ST- EX2			EX SW-505 INTAKE	FG= 1013.25	
ST- EX3			EX SW-505 INTAKE	FG= 1013.25	
ST- EX4			EX SW-513 INTAKE	RIM= 1013.96	
ST- 1			SW-501 INTAKE	FG= 1017.48	
ST- 2			NYOPLAST DRAIN BASIN	FG= 1020.98	2.
ST- 3			TEE	IE= 1009.90	
ST- 4			NYOPLAST DRAIN BASIN	FG= 1021.43	2.
ST- 5			TEE	IE= 1010.27	
ST- 6			TEE	IE= 1010.37	
ST- 7			NYOPLAST DRAIN BASIN	FG= 1019.34	2.
ST- 8			NYOPLAST DRAIN BASIN	FG= 1019.09	2.
ST- 9			TEE	IE= 1010.87	
ST- 10			NYOPLAST DRAIN BASIN	FG= 1020.92	2.
ST- 11			TEE	IE= 1011.19	
ST- 12			NYOPLAST DRAIN BASIN	FG= 1021.03	2.
ST- 13			SW-501 INTAKE	FG= 1020.55	
ST- 14			NYOPLAST DRAIN BASIN	FG= 1022.02	2.
ST- 15			TEE	IE= 1012.24	
ST- 16			NYOPLAST DRAIN BASIN	FG= 1022.11	2.
ST- 17			TEE	IE= 1012.56	
ST- 18			TEE	IE= 1012.66	
ST- 19			NYOPLAST DRAIN BASIN	FG= 1019.98	2.
ST- 20			NYOPLAST DRAIN BASIN	FG= 1020.27	2.
ST- 21			TEE	IE= 1012.82	
ST- 22			NYOPLAST DRAIN BASIN	FG= 1022.08	2.
ST- 23			TEE	IE= 1013.44	
ST- 24			TEE	IE= 1013.60	
ST- 25			NYOPLAST DRAIN BASIN	FG= 1021.51	2.
ST- 27			SW-501 INTAKE	FG= 1019.88	
ST- 28			NYOPLAST DRAIN BASIN	FG= 1024.11	2.
ST- 29			NYOPLAST DRAIN BASIN	FG= 1024.11	
ST- 30			TEE	IE= 1016.71	
ST- 31			NYOPLAST DRAIN BASIN	FG= 1024.04	2.
ST- 32			NYOPLAST DRAIN BASIN	FG= 1024.79	2.
ST- 33			TEE	IE= 1017.34	
ST- 34			TEE	IE= 1017.47	
ST- 35			TEE	IE= 1017.55	
ST- 36			TEE	IE= 1017.61	
ST- 37			NYOPLAST DRAIN BASIN	FG= 1025.73	2.
ST- 38			TEE	IE= 1018.03	
ST- 39			TEE	IE= 1018.16	
ST- 40			TEE	IE= 1018.23	
ST- 41			NYOPLAST DRAIN BASIN	FG= 1024.85	2.
ST- 42			NYOPLAST DRAIN BASIN	FG= 1024.86	2.
ST- 43			TEE	IE= 1019.42	
ST- 44			TEE	IE= 1019.64	
ST- 45			NYOPLAST DRAIN BASIN	FG= 1026.94	2.
ST- 46			TEE	IE= 1019.94	
ST- 47			TEE	IE= 1020.07	
ST- 48			NYOPLAST DRAIN BASIN	FG= 1026.80	2.
ST- 49			SW-501 INTAKE	FG= 1025.50	
ST- 50			NYOPLAST DRAIN BASIN	FG= 1027.09	2.
ST- 51			NYOPLAST DRAIN BASIN	FG= 1027.10	2.
ST- 51A			6" ROOF DRAIN	IE= 1025.00	
ST- 3A			6" ROOF DRAIN	IE= 1019.00	
ST- 4A			6" ROOF DRAIN	IE= 1019.00	
ST- 5A			6" ROOF DRAIN	IE= 1019.00	
ST- 6A			6" ROOF DRAIN	IE= 1019.00	
ST- 8A			6" ROOF DRAIN	IE= 1019.00	
ST- 9A			6" ROOF DRAIN	IE= 1019.00	
ST- 10A			6" ROOF DRAIN	IE= 1019.00	
ST- 11A			6" ROOF DRAIN	IE= 1019.00	
ST- 15A			6" ROOF DRAIN	IE= 1020.00	
ST- 16A			6" ROOF DRAIN	IE= 1020.00	
ST- 17A			6" ROOF DRAIN	IE= 1020.00	
ST- 18A			6" ROOF DRAIN	IE= 1020.00	
ST- 20A			6" ROOF DRAIN	IE= 1020.00	
ST- 21A			6" ROOF DRAIN	IE= 1020.00	
ST- 22A			6" ROOF DRAIN	IE= 1020.00	
ST- 23A			6" ROOF DRAIN	IE= 1020.00	
ST- 24A			6" ROOF DRAIN	IE= 1020.00	
ST- 29A			6" ROOF DRAIN	IE= 1022.00	
ST- 29B			6" ROOF DRAIN	IE= 1022.00	
ST- 30A			6" ROOF DRAIN	IE= 1022.00	
ST- 33A			6" ROOF DRAIN	IE= 1023.00	
ST- 34A			6" ROOF DRAIN	IE= 1023.00	
ST- 35A			6" ROOF DRAIN	IE= 1023.00	
ST- 36A			6" ROOF DRAIN	IE= 1023.00	
ST- 37A			6" ROOF DRAIN	IE= 1023.00	
ST- 266			SW-501 INTAKE	FG= 1023.43	

List of Storm Sewer Pipe

Pipe Number L-#	Structure To ST-#	Structure From ST-#	Storm Sewer Material	Diameter inches	Length feet	Slope %	FL(out)	Fl(in)	Note
L- EX2	ST- EX1	ST- EX2	RCP	66	97	0.60	1004.35	1004.93	
L- EX3	ST- EX2	ST- EX3	RCP	66	70	0.60	1005.03	1005.45	
L- EX4	ST- EX3	ST- EX4	RCP	66	65	0.60	1005.55	1005.94	
L- 1	ST- EX4	ST- 1	HDPE	36	30	0.67	1007.94	1008.14	
L- 2	ST- 1	ST- 2	HDPE	36	116	0.60	1008.24	1008.94	
L- 3	ST- 2	ST- 3	HDPE	24	22	0.73	1009.74	1009.90	
L- 4	ST- 3	ST- 4	HDPE	24	22	0.73	1009.90	1010.06	
L- 5	ST- 4	ST- 5	HDPE	24	21	0.52	1010.16	1010.27	
L- 6	ST- 5	ST- 6	HDPE	24	20	0.50	1010.27	1010.37	
L- 7	ST- 6	ST- 7	HDPE	24	15	0.53	1010.37	1010.45	
L- 8	ST- 7	ST- 8	HDPE	24	25	0.52	1010.55	1010.68	
L- 9	ST- 8	ST- 9	HDPE	24	19	0.53	1010.77	1010.87	
L- 10	ST- 9	ST- 10	HDPE	24	27	0.52	1010.87	1011.01	
L- 11	ST- 10	ST- 11	HDPE	24	16	0.50	1011.11	1011.19	
L- 12	ST- 11	ST- 12	HDPE	24	23	0.52	1011.19	1011.31	
L- 13	ST- 12	ST- 13	HDPE	24	11	0.55	1011.41	1011.47	
L- 14	ST- 13	ST- 14	HDPE	24	93	0.49	1011.57	1012.03	
L- 15	ST- 14	ST- 15	HDPE	24	22	0.50	1012.13	1012.24	
L- 16	ST- 15	ST- 16	HDPE	24	16	0.50	1012.24	1012.32	
L- 17	ST- 16	ST- 17	HDPE	24	27	0.52	1012.42	1012.56	
L- 18	ST- 17	ST- 18	HDPE	24	20	0.50	1012.56	1012.66	
L- 19	ST- 18	ST- 19	HDPE	24	13	0.54	1012.66	1012.73	
L- 20	ST- 19	ST- 20	HDPE	24	26	0.50	1012.83	1012.96	
L- 21	ST- 20	ST- 21	HDPE	18	19	1.21	1012.59	1012.82	
L- 22	ST- 21	ST- 22	HDPE	18	25	1.20	1012.82	1013.12	
L- 23	ST- 22	ST- 23	HDPE	18	18	1.22	1013.22	1013.44	
L- 24	ST- 23	ST- 24	HDPE	18	13	1.23	1013.44	1013.60	
L- 25	ST- 24	ST- 25	HDPE	18	10	1.20	1013.60	1013.72	
L- 27	ST- 25	ST- 27	HDPE	18	29	1.00	1013.82	1014.11	
L- 28	ST- 27	ST- 28	HDPE	18	85	1.00	1014.21	1015.06	
L- 29	ST- 28	ST- 29	HDPE	18	37	1.00	1015.96	1016.33	
L- 30	ST- 29	ST- 30	HDPE	18	28	1.00	1016.43	1016.71	
L- 31	ST- 30	ST- 31	HDPE	18	20	1.00	1016.71	1016.91	
L- 32	ST- 31	ST- 32	HDPE	18	24	0.50	1017.01	1017.13	
L- 33	ST- 32	ST- 33	HDPE	18	21	0.52	1017.23	1017.34	
L- 34	ST- 33	ST- 34	HDPE	18	25	0.52	1017.34	1017.47	
L- 35	ST- 34	ST- 35	HDPE	18	16	0.50	1017.47	1017.55	
L- 36	ST- 35	ST- 36	HDPE	18	11	0.55	1017.55	1017.61	
L- 37	ST- 36	ST- 37	HDPE	18	14	0.50	1017.61	1017.68	
L- 38	ST- 37	ST- 38	HDPE	15	24	0.62	1017.88	1018.03	
L- 39	ST- 38	ST- 39	HDPE	15	20	0.65	1018.03	1018.16	
L- 40	ST- 39	ST- 40	HDPE	15	11	0.64	1018.16	1018.23	
L- 41	ST- 40	ST- 41	HDPE	15	19	0.63	1018.23	1018.35	
L- 42	ST- 41	ST- 42	HDPE	15	27	0.63	1018.45	1018.62	
L- 43	ST- 42	ST- 43	HDPE	12	60	1.00	1018.82	1019.42	
L- 44	ST- 43	ST- 44	HDPE	12	22	1.00	1019.42	1019.64	
L- 45	ST- 44	ST- 45	HDPE	12	12	1.00	1019.64	1019.76	
L- 46	ST- 45	ST- 46	HDPE	12	8	1.00	1019.86	1019.94	
L- 47	ST- 46	ST- 47	HDPE	12	13	1.00	1019.94	1020.07	
L- 48	ST- 47	ST- 48	HDPE	12	9	1.00	1020.07	1020.16	
L- 49	ST- 48	ST- 49	HDPE	12	66	0.74	1020.26	1020.75	
L- 50	ST- 49	ST- 50	HDPE	10	65	0.75	1020.88	1021.37	
L- 51	ST- 50	ST- 51	HDPE	6	17	1.00	1021.64	1021.81	
L- 51A	ST- 51	ST- 51A	HDPE	6	9	1.00	1021.91	1022.00	
L- 3A	ST- 3	ST- 3A	HDPE	6	9	92.78	1010.65	1019.00	
L- 4A	ST- 4	ST- 4A	HDPE	6	8	96.75	1011.26	1019.00	
L- 5A	ST- 5	ST- 5A	HDPE	6	14	57.00	1011.02	1019.00	
L- 6A	ST- 6	ST- 6A	HDPE	6	14	56.29	1011.12	1019.00	
L- 8A	ST- 8	ST- 8A	HDPE	6	13	54.77	1011.88	1019.00	
L- 9A	ST- 9	ST- 9A	HDPE	6	15	49.20	1011.62	1019.00	
L- 10A	ST- 10	ST- 10A	HDPE	6	11	61.73	1012.21	1019.00	
L- 11A	ST- 11	ST- 11A	HDPE	6	10	70.60	1011.94	1019.00	
L- 15A	ST- 15	ST- 15A	HDPE	6	10	70.10	1012.99	1020.00	
L- 16A	ST- 16	ST- 16A	HDPE	6	11	58.91	1013.52	1020.00	
L- 17A	ST- 17	ST- 17A	HDPE	6	15	44.60	1013.31	1020.00	
L- 18A	ST- 18	ST- 18A	HDPE	6	15	43.93	1013.41	1020.00	
L- 20A	ST- 20	ST- 20A	HDPE	6	15	38.93	1014.16	1020.00	
L- 21A	ST- 21	ST- 21A	HDPE	6	15	44.53	1013.32	1020.00	
L- 22A	ST- 22	ST- 22A	HDPE	6	11	55.27	1013.92	1020.00	
L- 23A	ST- 23	ST- 23A	HDPE	6	11	55.09	1013.94	1020.00	
L- 24A	ST- 24	ST- 24A	HDPE	6	11	53.64	1014.10	1020.00	
L- 29A	ST- 29	ST- 29A	HDPE	6	19	25.63	1017.13	1022.00	
L- 29B	ST- 29	ST- 29B	HDPE	6	11	44.27	1017.13	1022.00	
L- 30A	ST- 30	ST- 30A	HDPE	6	15	31.93	1017.21	1022.00	
L- 33A	ST- 33	ST- 33A	HDPE	6	11	46.91	1017.84	1023.00	
L- 34A	ST- 34	ST- 34A	HDPE	6	8	62.87	1017.97	1023.00	
L- 35A	ST- 35	ST- 35A	HDPE	6	8	61.88	1018.05	1023.00	
L- 36A	ST- 36	ST- 36A	HDPE	6	15	32.60	1018.11	1023.00	
L- 37A	ST- 37	ST- 37A	HDPE	6	14	32.29	1018.48	1023.00	
L- 266	ST- 37	ST- 266	HDPE	12	35	1.00	1018.08	1018.43	

List of Intakes and Utility Accesses

Structure Number ST-#	Location NORTHING	Location EASTING	Type or Standard Road Plan	Form Grade/Rim Elevation	Note
ST- 38A			6" ROOF DRAIN	IE= 1023.00	
ST- 39A			6" ROOF DRAIN	IE= 1023.00	
ST- 40A			6" ROOF DRAIN	IE= 1023.00	
ST- 41A			6" ROOF DRAIN	IE= 1023.00	
ST- 43A			6" ROOF DRAIN	IE= 1025.00	
ST- 44A			6" ROOF DRAIN	IE= 1025.00	
ST- 46A			6" ROOF DRAIN	IE= 1025.00	
ST- 47A			6" ROOF DRAIN	IE= 1025.00	
ST- 50A			6" ROOF DRAIN	IE= 1025.00	
ST- 52			NYOPLAST DRAIN BASIN	FG= 1019.36	2.
ST- 53			NYOPLAST DRAIN BASIN	FG= 1019.78	2.
ST- 54			TEE	IE= 1015.09	
ST- 55			NYOPLAST DRAIN BASIN	FG= 1019.25	2.
ST- 56			NYOPLAST DRAIN BASIN	FG= 1016.74	2.
ST- 57			TEE	IE= 1016.67	
ST- 58			NYOPLAST DRAIN BASIN	FG= 1019.95	2.
ST- 59			TEE	IE= 1017.29	
ST- 60			CLEAN OUT	IE= 1017.40	
ST- 53A			6" ROOF DRAIN	IE= 1018.00	
ST- 53B			6" ROOF DRAIN	IE= 1018.00	
ST- 54A			6" ROOF DRAIN	IE= 1018.00	
ST- 55A			6" ROOF DRAIN	IE= 1018.00	
ST- 61			TEE	IE=	
ST- 61A			6" ROOF DRAIN	IE= 1018.00	
ST- 61B			6" ROOF DRAIN	IE= 1018.00	
ST- 58A			6" ROOF DRAIN	IE= 1018.00	
ST- 58B			6" ROOF DRAIN	IE= 1018.00	
ST- 59A			6" ROOF DRAIN	IE= 1018.00	
ST- 60A			6" ROOF DRAIN	IE= 1018.00	
ST- 62			TEE	IE=	
ST- 63			NYOPLAST DRAIN BASIN	FG= 1020.04	2.
ST- 64			TEE	IE= 1014.52	
ST- 65			TEE	IE= 1014.63	
ST- 66			TEE	IE= 1014.83	
ST- 67			TEE	IE= 1015.05	
ST- 68			TEE	IE= 1015.24	
ST- 69			TEE	IE= 1015.35	
ST- 70			NYOPLAST DRAIN BASIN	FG= 1019.99	2.
ST- 71			TEE	IE= 1015.83	
ST- 72			NYOPLAST DRAIN BASIN	FG= 1018.99	2.
ST- 73			NYOPLAST DRAIN BASIN	FG= 1020.00	2.
ST- 74			TEE	IE= 1016.69	
ST- 75			NYOPLAST DRAIN BASIN	FG= 1019.91	2.
ST- 62A			6" ROOF DRAIN	IE= 1018.00	
ST- 63A			6" ROOF DRAIN	IE= 1018.00	
ST- 64A			6" ROOF DRAIN	IE= 1018.00	
ST- 65A			6" ROOF DRAIN	IE= 1018.00	
ST- 66A			6" ROOF DRAIN	IE= 1018.00	
ST- 67A			6" ROOF DRAIN	IE= 1018.00	
ST- 68A			6" ROOF DRAIN	IE= 1018.00	
ST- 69A			6" ROOF DRAIN	IE= 1018.00	
ST- 70A			6" ROOF DRAIN	IE= 1018.00	
ST- 71A			6" ROOF DRAIN	IE= 1018.00	
ST- 73A			6" ROOF DRAIN	IE= 1018.00	
ST- 74A			6" ROOF DRAIN	IE= 1018.00	
ST- 75A			6" ROOF DRAIN	IE= 1018.00	
ST- 75B			6" ROOF DRAIN	IE= 1018.00	
ST- 76			SW-501 INTAKE	FG= 1019.83	
ST- 77			SW-501 INTAKE	FG= 1018.93	

List of Storm Sewer Pipe

Pipe Number L-#	Structure To ST-#	Structure From ST-#	Storm Sewer Material	Diameter inches	Length feet	Slope %	FL(out)	Fl(in)	Note
L- 38A	ST- 38	ST- 38A	HDPE	6	14	32.79	1018.41	1023.00	
L- 39A	ST- 39	ST- 39A	HDPE	6	17	26.24	1018.54	1023.00	
L- 40A	ST- 40	ST- 40A	HDPE	6	8	54.87	1018.61	1023.00	
L- 41A	ST- 41	ST- 41A	HDPE	6	8	50.62	1018.95	1023.00	
L- 43A	ST- 43	ST- 43A	HDPE	6	22	24.23	1019.67	1025.00	
L- 44A	ST- 44	ST- 44A	HDPE	6	16	31.94	1019.89	1025.00	
L- 46A	ST- 46	ST- 46A	HDPE	6	15	32.07	1020.19	1025.00	
L- 47A	ST- 47	ST- 47A	HDPE	6	15	31.20	1020.32	1025.00	
L- 50A	ST- 50	ST- 50A	HDPE	6	8	42.00	1021.64	1025.00	
L- 52	ST- 1	ST- 52	HDPE	15	67	1.00	1013.33	1014.00	
L- 53	ST- 52	ST- 53	HDPE	10	34	1.00	1014.33	1014.67	
L- 54	ST- 53	ST- 54	HDPE	10	32	1.00	1014.77	1015.09	
L- 55	ST- 54	ST- 55	HDPE	10	12	1.00	1015.09	1015.21	
L- 56	ST- 55	ST- 56	HDPE	10	43	1.00	1015.31	1015.74	
L- 57	ST- 56	ST- 57	HDPE	8	78	1.00	1015.89	1016.67	
L- 58	ST- 57	ST- 58	HDPE	8	23	1.00	1016.67	1016.90	
L- 59	ST- 58	ST- 59	HDPE	6	29	1.00	1017.00	1017.29	
L- 60	ST- 59	ST- 60	HDPE	6	11	1.00	1017.29	1017.40	
L- 53A	ST- 53	ST- 53A	HDPE	6	19	16.11	1014.94	1018.00	
L- 53B	ST- 53	ST- 53B	HDPE	6	19	16.11	1014.94	1018.00	
L- 54A	ST- 54	ST- 54A	HDPE	6	21	13.86	1015.09	1018.00	
L- 55A	ST- 55	ST- 55A	HDPE	6	21	12.00	1015.48	1018.00	
L- 61	ST- 57	ST- 61	HDPE	6	18	5.11	1016.67	1017.59	
L- 61A	ST- 61	ST- 61A	HDPE	6	8	5.12	1017.59	1018.00	
L- 61B	ST- 61	ST- 61B	HDPE	6	13	3.15	1017.59	1018.00	
L- 58A	ST- 58	ST- 58A	HDPE	6	16	6.25	1017.00	1018.00	
L- 58B	ST- 58	ST- 58B	HDPE	6	15	6.67	1017.00	1018.00	
L- 59A	ST- 59	ST- 59A	HDPE	6	16	4.44	1017.29	1018.00	
L- 60A	ST- 60	ST- 60A	HDPE	6	4	15.00	1017.40	1018.00	
L- 62	ST- 52	ST- 62	HDPE	10	15	1.00	1013.93	1014.08	
L- 63	ST- 62	ST- 63	HDPE	10	15	1.00	1014.08	1014.23	
L- 64	ST- 268	ST- 64	HDPE	8	16	1.00	1014.36	1014.52	
L- 65	ST- 64	ST- 65	HDPE	8	11	1.00	1014.52	1014.63	
L- 66	ST- 65	ST- 66	HDPE	8	20	1.00	1014.63	1014.83	
L- 67	ST- 66	ST- 67	HDPE	8	22	1.00	1014.83	1015.05	
L- 68	ST- 67	ST- 68	HDPE	8	19	1.00	1015.05	1015.24	
L- 69	ST- 68	ST- 69	HDPE	8	11	1.00	1015.24	1015.35	
L- 70	ST- 69	ST- 70	HDPE	8	19	1.00	1015.35	1015.54	
L- 71	ST- 70	ST- 71	HDPE	6	16	1.00	1015.67	1015.83	
L- 72	ST- 71	ST- 72	HDPE	6	14	1.00	1015.83	1015.97	
L- 73	ST- 72	ST- 73	HDPE	6	39	1.00	1016.07	1016.46	
L- 74	ST- 73	ST- 74	HDPE	6	13	1.00	1016.56	1016.69	
L- 75	ST- 74	ST- 75	HDPE	6	21	1.00	1016.69	1016.90	
L- 62A	ST- 62	ST- 62A	HDPE	6	11	33.18	1014.35	1018.00	
L- 63A	ST- 268	ST- 63A	HDPE	6	11	31.82	1014.50	1018.00	
L- 64A	ST- 64	ST- 64A	HDPE	6	8	41.37	1014.69	1018.00	
L- 65A	ST- 65	ST- 65A	HDPE	6	17	18.82	1014.80	1018.00	
L- 66A	ST- 66	ST- 66A	HDPE	6	14	21.43	1015.00	1018.00	
L- 67A	ST- 67	ST- 67A	HDPE	6	14	19.86	1015.22	1018.00	
L- 68A	ST- 68	ST- 68A	HDPE	6	15	17.27	1015.41	1018.00	
L- 69A	ST- 69	ST- 69A	HDPE	6	8	31.00	1015.52	1018.00	
L- 70A	ST- 70	ST- 70A	HDPE	6	8	29.13	1015.67	1018.00	
L- 71A	ST- 71	ST- 71A	HDPE	6	16	13.56	1015.83	1018.00	
L- 73A	ST- 73	ST- 73A	HDPE	6	12	16.08	1016.07	1018.00	
L- 74A	ST- 74	ST- 74A	HDPE	6	10	13.10	1016.69	1018.00	
L- 75A	ST- 75	ST- 75A	HDPE	6	14	7.14	1017.00	1018.00	
L- 75B	ST- 75	ST- 75B	HDPE	6	24	4.17	1017.00	1018.00	
L- 76	ST- 63	ST- 76	HDPE	10	59	1.00	1014.33	1014.92	
L- 77	ST- 76	ST- 77	HDPE	8	32	1.00	1015.05	1015.37	

DATE	REVISIONS
12-16-13	CITY COUNCIL SUBMITTAL #3
12-10-13	SITE PLAN SUBMITTAL #3
11-26-13	SITE PLAN SUBMITTAL #2
11-12-13	SITE PLAN SUBMITTAL #1

3405 S.E. CROSSROADS DRIVE, SUITE G
GRIMES, IOWA 50111
PHONE: (515) 369-4400 FAX: (515) 369-4410

ENGINEER: JAT | TECH: DAM

CIVIL DESIGN ADVANTAGE
WAUKEE, IOWA

SPRINGS AT PRAIRIE CROSSING

UTILITY PLAN

C4.4

1309.381

FILE: H:\2013\1309.381\DWG\1309381-SITE.DWG
RE-SAVED: 12/16/2013 1:55 PM COMMENT:
PLOTTED BY: DOUG MANDERNACH PLOTTED: 12/16/2013 1:55 PM TECH:
ENG:

List of Intakes and Utility Accesses

Structure Number ST-#	Location NORTHING	Location EASTING	Type or Standard Road Plan	Form Grade/Rim Elevation	Note
ST- 78			TEE	IE= 1009.38	
ST- 79			NYOPLAST DRAIN BASIN	FG= 1021.09	2.
ST- 80			TEE	IE= 1009.60	
ST- 81			TEE	IE= 1009.68	
ST- 82			TEE	IE= 1009.73	
ST- 83			TEE	IE= 1009.83	
ST- 84			NYOPLAST DRAIN BASIN	FG= 1021.05	2.
ST- 85			TEE	IE= 1010.12	
ST- 86			TEE	IE= 1010.27	
ST- 87			TEE	IE= 1010.32	
ST- 88			TEE	IE= 1010.40	
ST- 89			NYOPLAST DRAIN BASIN	FG= 1020.59	2.
ST- 90			TEE	IE= 1010.73	
ST- 91			TEE	IE= 1010.80	
ST- 92			TEE	IE= 1010.92	
ST- 94			NYOPLAST DRAIN BASIN	FG= 1019.76	2.
ST- 95			SW-511 INTAKE	FG= 1018.98	
ST- 78A			6" ROOF DRAIN	IE= 1019.00	
ST- 80A			6" ROOF DRAIN	IE= 1018.00	
ST- 81A			6" ROOF DRAIN	IE= 1019.00	
ST- 82A			6" ROOF DRAIN	IE= 1019.00	
ST- 83A			6" ROOF DRAIN	IE= 1019.00	
ST- 84A			6" ROOF DRAIN	IE= 1019.00	
ST- 85A			6" ROOF DRAIN	IE= 1019.00	
ST- 86A			6" ROOF DRAIN	IE= 1019.00	
ST- 87A			6" ROOF DRAIN	IE= 1019.00	
ST- 88A			6" ROOF DRAIN	IE= 1019.00	
ST- 90A			6" ROOF DRAIN	IE= 1019.00	
ST- 91A			6" ROOF DRAIN	IE= 1019.00	
ST- 92A			6" ROOF DRAIN	IE= 1019.00	
ST- 96			TEE	IE= 1013.25	
ST- 97			CROSS	IE= 1014.03	
ST- 98			NYOPLAST DRAIN BASIN	FG= 1020.37	2.
ST- 96A			6" ROOF DRAIN	IE= 1019.00	
ST- 98A			6" ROOF DRAIN	IE= 1019.00	
ST- 98B			6" ROOF DRAIN	IE= 1019.00	
ST- 99			TEE	IE= 1014.32	
ST- 99A			6" ROOF DRAIN	IE= 1019.00	
ST- 99B			6" ROOF DRAIN	IE= 1019.00	
ST- 100			TEE	IE= 1014.22	
ST- 100A			6" ROOF DRAIN	IE= 1019.00	
ST- 100B			6" ROOF DRAIN	IE= 1019.00	
ST- 101			NYOPLAST DRAIN BASIN	FG= 1019.51	2.
ST- 102			TEE	IE=	
ST- 103			TEE	IE=	
ST- 104			NYOPLAST DRAIN BASIN	FG= 1020.58	2.
ST- 105			SW-511 INTAKE	FG= 1019.87	
ST- 101A			6" ROOF DRAIN	IE= 1019.00	
ST- 102A			6" ROOF DRAIN	IE= 1019.00	
ST- 103A			6" ROOF DRAIN	IE= 1019.00	
ST- 106			TEE	IE=	
ST- 107			TEE	IE=	
ST- 108			SW-511 INTAKE	FG=	
ST- 109			SW-501 INTAKE	FG=	
ST- 106A			6" ROOF DRAIN	IE= 1019.00	
ST- 107A			6" ROOF DRAIN	IE= 1019.00	
ST- 110			TEE	IE=	
ST- 110A			6" ROOF DRAIN	IE= 1019.00	
ST- 110B			6" ROOF DRAIN	IE= 1019.00	
ST- 111			NYOPLAST DRAIN BASIN	FG= 1021.94	2.
ST- 112			TEE	IE=	
ST- 113			TEE	IE=	
ST- 114			TEE	IE=	
ST- 115			CLEANOUT	IE=	
ST- 112A			6" ROOF DRAIN	IE= 1020.00	
ST- 113A			6" ROOF DRAIN	IE= 1020.00	

List of Storm Sewer Pipe

Pipe Number L-#	Structure To ST-#	Structure From ST-#	Storm Sewer Material	Diameter inches	Length feet	Slope %	FL(out)	Fl(in)	Note
L- 78	ST- 2	ST- 78	HDPE	30	8	0.50	1009.34	1009.38	
L- 79	ST- 78	ST- 79	HDPE	30	17	0.53	1009.38	1009.47	
L- 80	ST- 79	ST- 80	HDPE	30	6	0.50	1009.57	1009.60	
L- 81	ST- 80	ST- 81	HDPE	30	16	0.50	1009.60	1009.68	
L- 82	ST- 81	ST- 82	HDPE	30	10	0.50	1009.68	1009.73	
L- 83	ST- 82	ST- 83	HDPE	30	19	0.53	1009.73	1009.83	
L- 84	ST- 83	ST- 84	HDPE	30	20	0.50	1009.83	1009.93	
L- 85	ST- 84	ST- 85	HDPE	30	18	0.50	1010.03	1010.12	
L- 86	ST- 85	ST- 86	HDPE	30	30	0.50	1010.12	1010.27	
L- 87	ST- 86	ST- 87	HDPE	30	10	0.50	1010.27	1010.32	
L- 88	ST- 87	ST- 88	HDPE	30	16	0.50	1010.32	1010.40	
L- 89	ST- 88	ST- 89	HDPE	30	35	0.51	1010.40	1010.58	
L- 90	ST- 89	ST- 90	HDPE	30	9	0.56	1010.68	1010.73	
L- 91	ST- 90	ST- 91	HDPE	30	13	0.54	1010.73	1010.80	
L- 92	ST- 91	ST- 92	HDPE	30	23	0.52	1010.80	1010.92	
L- 94	ST- 92	ST- 94	HDPE	30	57	0.51	1010.92	1011.21	
L- 95	ST- 94	ST- 95	HDPE	10	51	1.00	1012.54	1013.05	
L- 78A	ST- 78	ST- 78A	HDPE	6	10	86.20	1010.38	1019.00	
L- 80A	ST- 80	ST- 80A	HDPE	6	7	105.71	1010.60	1018.00	
L- 81A	ST- 81	ST- 81A	HDPE	6	7	118.86	1010.68	1019.00	
L- 82A	ST- 82	ST- 82A	HDPE	6	13	63.62	1010.73	1019.00	
L- 83A	ST- 83	ST- 83A	HDPE	6	15	54.47	1010.83	1019.00	
L- 84A	ST- 84	ST- 84A	HDPE	6	14	51.21	1011.83	1019.00	
L- 85A	ST- 85	ST- 85A	HDPE	6	15	52.53	1011.12	1019.00	
L- 86A	ST- 86	ST- 86A	HDPE	6	13	59.46	1011.27	1019.00	
L- 87A	ST- 87	ST- 87A	HDPE	6	7	109.71	1011.32	1019.00	
L- 88A	ST- 88	ST- 88A	HDPE	6	7	108.57	1011.40	1019.00	
L- 90A	ST- 90	ST- 90A	HDPE	6	11	66.09	1011.73	1019.00	
L- 91A	ST- 91	ST- 91A	HDPE	6	11	65.45	1011.80	1019.00	
L- 92A	ST- 92	ST- 92A	HDPE	6	11	64.36	1011.92	1019.00	
L- 96	ST- 94	ST- 96	HDPE	6	22	2.00	1012.81	1013.25	
L- 97	ST- 96	ST- 97	HDPE	6	39	2.00	1013.25	1014.03	
L- 98	ST- 97	ST- 98	HDPE	6	26	1.00	1014.03	1014.29	
L- 96A	ST- 96	ST- 96A	HDPE	6	19	30.26	1013.25	1019.00	
L- 98A	ST- 98	ST- 98A	HDPE	6	37	12.46	1014.39	1019.00	
L- 98B	ST- 98	ST- 98B	HDPE	6	27	17.44	1014.29	1019.00	
L- 99	ST- 97	ST- 99	HDPE	6	29	1.00	1014.03	1014.32	
L- 99A	ST- 99	ST- 99A	HDPE	6	7	66.86	1014.32	1019.00	
L- 99B	ST- 99	ST- 99B	HDPE	6	10	46.80	1014.32	1019.00	
L- 100	ST- 97	ST- 100	HDPE	6	19	1.00	1014.03	1014.22	
L- 100A	ST- 100	ST- 100A	HDPE	6	10	47.80	1014.22	1019.00	
L- 100B	ST- 100	ST- 100B	HDPE	6	7	68.29	1014.22	1019.00	
L- 101	ST- 94	ST- 101	HDPE	30	27	0.52	1011.31	1011.45	
L- 102	ST- 101	ST- 102	HDPE	30	38	0.50	1011.55	1011.74	
L- 103	ST- 102	ST- 103	HDPE	30	23	0.52	1011.74	1011.86	
L- 104	ST- 103	ST- 104	HDPE	30	22	0.50	1011.86	1011.97	
L- 105	ST- 104	ST- 105	HDPE	10	60	0.50	1013.30	1013.60	
L- 101A	ST- 101	ST- 101A	HDPE	6	21	4852.38		1019.00	
L- 102A	ST- 102	ST- 102A	HDPE	6	11	9263.64		1019.00	
L- 103A	ST- 103	ST- 103A	HDPE	6	11	9263.64		1019.00	
L- 106	ST- 104	ST- 106	HDPE	10	7	0.57	1013.30	1013.34	
L- 107	ST- 106	ST- 107	HDPE	10	25	0.52	1013.34	1013.47	
L- 108	ST- 107	ST- 108	HDPE	10	32	0.50	1013.47	1013.63	
L- 109	ST- 108	ST- 109	HDPE	8	36	0.50	1013.76	1013.94	
L- 106A	ST- 106	ST- 106A	HDPE	6	13	7838.46		1019.00	
L- 107A	ST- 107	ST- 107A	HDPE	6	18	5661.11		1019.00	
L- 110	ST- 109	ST- 110	HDPE	6	26	0.50	1014.07	1014.20	
L- 110A	ST- 110	ST- 110A	HDPE	6	6	16983.33		1019.00	
L- 110B	ST- 110	ST- 110B	HDPE	6	10	10190.00		1019.00	
L- 111	ST- 104	ST- 111	HDPE	24	104	0.50	1012.37	1012.89	
L- 112	ST- 111	ST- 112	HDPE	6	8	0.50	1014.09	1014.13	
L- 113	ST- 112	ST- 113	HDPE	6	25	0.52	1014.13	1014.26	
L- 114	ST- 113	ST- 114	HDPE	6	16	0.50	1014.26	1014.34	
L- 115	ST- 114	ST- 115	HDPE	6	10	0.50	1014.34	1014.39	
L- 112A	ST- 112	ST- 112A	HDPE	6	10	10200.00		1020.00	
L- 113A	ST- 113	ST- 113A	HDPE	6	7	14571.43		1020.00	

List of Intakes and Utility Accesses

Structure Number ST-#	Location NORTHING	Location EASTING	Type or Standard Road Plan	Form Grade/Rim Elevation	Note
ST- 114A			6" ROOF DRAIN	IE= 1020.00	
ST- 115A			6" ROOF DRAIN	IE= 1020.00	
ST- 116			TEE	IE=	
ST- 117			TEE	IE=	
ST- 118			NYOPLAST DRAIN BASIN	FG= 1020.96	2.
ST- 119			SW-511 INTAKE	FG=	
ST- 116A			6" ROOF DRAIN	IE= 1020.00	
ST- 117A			6" ROOF DRAIN	IE= 1020.00	
ST- 120			TEE	IE=	
ST- 121			TEE	IE=	
ST- 122			NYOPLAST DRAIN BASIN	FG=	2.
ST- 120A			6" ROOF DRAIN	IE= 1020.00	
ST- 122A			6" ROOF DRAIN	IE= 1020.00	
ST- 122B			6" ROOF DRAIN	IE= 1020.00	
ST- 123			TEE	IE=	
ST- 123A			6" ROOF DRAIN	IE= 1020.00	
ST- 123B			6" ROOF DRAIN	IE= 1020.00	
ST- 124			TEE	IE=	
ST- 124A			6" ROOF DRAIN	IE= 1020.00	
ST- 124B			6" ROOF DRAIN	IE= 1020.00	
ST- 125			NYOPLAST DRAIN BASIN	FG= 1021.02	2.
ST- 126			TEE	IE=	
ST- 127			TEE	IE=	
ST- 128			TEE	IE=	
ST- 129			NYOPLAST DRAIN BASIN	FG= 1022.05	2.
ST- 130			TEE	IE=	
ST- 131			SW-511 INTAKE	FG= 1021.76	
ST- 132			TEE	IE=	
ST- 126A			6" ROOF DRAIN	IE= 1020.00	
ST- 127A			6" ROOF DRAIN	IE= 1020.00	
ST- 128A			6" ROOF DRAIN	IE= 1020.00	
ST- 130A			6" ROOF DRAIN	IE= 1020.00	
ST- 131A			6" ROOF DRAIN	IE= 1020.00	
ST- 132A			6" ROOF DRAIN	IE= 1020.00	
ST- 132B			6" ROOF DRAIN	IE= 1020.00	
ST- 133			SW-501 INTAKE	FG= 1021.24	
ST- 134			NYOPLAST DRAIN BASIN	FG= 1023.62	2.
ST- 135			TEE	IE=	
ST- 136			SW-511 INTAKE	FG= 1022.40	
ST- 137			TEE	IE=	
ST- 135A			6" ROOF DRAIN	IE= 1022.00	
ST- 137A			6" ROOF DRAIN	IE= 1022.00	
ST- 137B			6" ROOF DRAIN	IE= 1022.00	
ST- 138			TEE	IE=	
ST- 139			TEE	IE=	
ST- 140			NYOPLAST DRAIN BASIN	FG= 1024.09	2.
ST- 141			TEE	IE=	
ST- 142			NYOPLAST DRAIN BASIN	FG= 1023.79	2.
ST- 143			NYOPLAST DRAIN BASIN	FG= 1024.77	2.
ST- 138A			6" ROOF DRAIN	IE= 1022.00	
ST- 139A			6" ROOF DRAIN	IE= 1022.00	
ST- 140A			6" ROOF DRAIN	IE= 1022.00	
ST- 141A			6" ROOF DRAIN	IE= 1022.00	
ST- 143A			6" ROOF DRAIN	IE= 1023.00	
ST- 143B			6" ROOF DRAIN	IE= 1023.00	
ST- 144			NYOPLAST DRAIN BASIN	FG= 1025.10	2.
ST- 145			NYOPLAST DRAIN BASIN	FG= 1025.12	2.
ST- 146			TEE	IE=	
ST- 147			TEE	IE=	
ST- 148			NYOPLAST DRAIN BASIN	FG= 1025.75	2.
ST- 149			SW-501 INTAKE	FG= 1023.52	
ST- 144A			6" ROOF DRAIN	IE= 1023.00	
ST- 145A			6" ROOF DRAIN	IE= 1023.00	
ST- 146A			6" ROOF DRAIN	IE= 1023.00	
ST- 147A			6" ROOF DRAIN	IE= 1023.00	
ST- 148A			6" ROOF DRAIN	IE= 1023.00	

List of Storm Sewer Pipe

Pipe Number L-#	Structure To ST-#	Structure From ST-#	Storm Sewer Material	Diameter inches	Length feet	Slope %	FL(out)	Fl(in)	Note
L- 114A	ST- 114	ST- 114A	HDPE	6	7	14571.43		1020.00	
L- 115A	ST- 115	ST- 115A	HDPE	6	13	7846.15		1020.00	
L- 116	ST- 111	ST- 116	HDPE	24	22	0.50	1012.99	1013.10	
L- 117	ST- 116	ST- 117	HDPE	24	23	0.52	1013.10	1013.22	
L- 118	ST- 117	ST- 118	HDPE	24	55	0.51	1013.22	1013.50	
L- 119	ST- 118	ST- 119	HDPE	10	52	0.50	1014.43	1014.69	
L- 116A	ST- 116	ST- 116A	HDPE	6	9	11333.33		1020.00	
L- 117A	ST- 117	ST- 117A	HDPE	6	9	11333.33		1020.00	
L- 120	ST- 118	ST- 120	HDPE	8	20	0.50	1014.57	1014.67	
L- 121	ST- 120	ST- 121	HDPE	8	39	0.51	1014.67	1014.87	
L- 122	ST- 121	ST- 122	HDPE	6	27	0.52	1014.87	1015.01	
L- 120A	ST- 120	ST- 120A	HDPE	6	17	6000.00		1020.00	
L- 122A	ST- 122	ST- 122A	HDPE	6	39	2615.38		1020.00	
L- 122B	ST- 122	ST- 122B	HDPE	6	25	4080.00		1020.00	
L- 123	ST- 121	ST- 123	HDPE	6	31	0.52	1016.00	1016.16	
L- 123A	ST- 123	ST- 123A	HDPE	6	7	14571.43		1020.00	
L- 123B	ST- 123	ST- 123B	HDPE	6	10	10200.00		1020.00	
L- 124	ST- 121	ST- 124	HDPE	6	17	0.53	1016.00	1016.09	
L- 124A	ST- 124	ST- 124A	HDPE	6	10	10200.00		1020.00	
L- 124B	ST- 124	ST- 124B	HDPE	6	7	14571.43		1020.00	
L- 125	ST- 118	ST- 125	HDPE	18	10	0.60	1013.90	1013.96	
L- 126	ST- 125	ST- 126	HDPE	18	17	0.53	1014.06	1014.15	
L- 127	ST- 126	ST- 127	HDPE	18	39	0.54	1014.15	1014.36	
L- 128	ST- 127	ST- 128	HDPE	18	23	0.57	1014.36	1014.49	
L- 129	ST- 128	ST- 129	HDPE	18	22	0.55	1014.49	1014.61	
L- 130	ST- 129	ST- 130	HDPE	8	6	0.50	1015.28	1015.31	
L- 131	ST- 130	ST- 131	HDPE	8	32	0.50	1015.31	1015.47	
L- 132	ST- 131	ST- 132	HDPE	6	17	0.53	1015.60	1015.69	
L- 126A	ST- 126	ST- 126A	HDPE	6	20	5100.00		1020.00	
L- 127A	ST- 127	ST- 127A	HDPE	6	9	11333.33		1020.00	
L- 128A	ST- 128	ST- 128A	HDPE	6	9	11333.33		1020.00	
L- 130A	ST- 130	ST- 130A	HDPE	6	12	8500.00		1020.00	
L- 131A	ST- 131	ST- 131A	HDPE	6	15	6800.00		1020.00	
L- 132A	ST- 132	ST- 132A	HDPE	6	3	34000.00		1020.00	
L- 132B	ST- 132	ST- 132B	HDPE	6	12	8500.00		1020.00	
L- 133	ST- 129	ST- 133	HDPE	18	74	0.50	1014.71	1015.08	
L- 134	ST- 133	ST- 134	HDPE	18	72	0.50	1015.18	1015.54	
L- 135	ST- 134	ST- 135	HDPE	6	26	0.50	1016.34	1016.47	
L- 136	ST- 135	ST- 136	HDPE	6	40	113.00	1016.47	1061.67	
L- 137	ST- 136	ST- 137	HDPE	6	38	0.50	1016.77	1016.96	
L- 135A	ST- 135	ST- 135A	HDPE	6	22	4645.45		1022.00	
L- 137A	ST- 137	ST- 137A	HDPE	6	7	14600.00		1022.00	
L- 137B	ST- 137	ST- 137B	HDPE	6	10	10220.00		1022.00	
L- 138	ST- 134	ST- 138	HDPE	18	9	0.56	1015.64	1015.69	
L- 139	ST- 138	ST- 139	HDPE	18	13	0.54	1015.69	1015.76	
L- 140	ST- 139	ST- 140	HDPE	18	19	0.53	1015.76	1015.86	
L- 141	ST- 140	ST- 141	HDPE	18	42	0.50	1015.96	1016.17	
L- 142	ST- 141	ST- 142	HDPE	18	17	0.53	1016.17	1016.26	
L- 143	ST- 142	ST- 143	HDPE	6	21	0.52	1017.06	1017.17	
L- 138A	ST- 138	ST- 138A	HDPE	6	10	10220.00		1022.00	
L- 139A	ST- 139	ST- 139A	HDPE	6	9	11355.56		1022.00	
L- 140A	ST- 140	ST- 140A	HDPE	6	9	11355.56		1022.00	
L- 141A	ST- 141	ST- 141A	HDPE	6	21	4866.67		1022.00	
L- 143A	ST- 143	ST- 143A	HDPE	6	18	5683.33		1023.00	
L- 143B	ST- 143	ST- 143B	HDPE	6	25	4092.00		1023.00	
L- 144	ST- 142	ST- 144	HDPE	18	30	0.50	1016.36	1016.51	
L- 145	ST- 144	ST- 145	HDPE	18	26	0.50	1016.61	1016.74	
L- 146	ST- 145	ST- 146	HDPE	18	19	0.53	1016.84	1016.94	
L- 147	ST- 146	ST- 147	HDPE	18	11	0.55	1016.94	1017.00	
L- 148	ST- 147	ST- 148	HDPE	18	15	0.53	1017.00	1017.08	
L- 149	ST- 148	ST- 149	HDPE	10	34	0.50	1017.61	1017.78	
L- 144A	ST- 144	ST- 144A	HDPE	6	11	9300.00		1023.00	
L- 145A	ST- 145	ST- 145A	HDPE	6	7	14614.29		1023.00	
L- 146A	ST- 146	ST- 146A	HDPE	6	6	17050.00		1023.00	
L- 147A	ST- 147	ST- 147A	HDPE	6	16	6393.75		1023.00	
L- 148A	ST- 148	ST- 148A	HDPE	6	13	7869.23		1023.00	

REVISIONS	DATE
CITY COUNCIL SUBMITTAL #3	12-16-13
SITE PLAN SUBMITTAL #3	12-10-13
SITE PLAN SUBMITTAL #2	11-26-13
SITE PLAN SUBMITTAL #1	11-12-13

3405 S.E. CROSSROADS DRIVE, SUITE G
GRIMES, IOWA 50111
PHONE: (515) 369-4400 FAX: (515) 369-4410

ENGINEER: JAT | TECH: DAM

CIVIL DESIGN ADVANTAGE

WAUKEE, IOWA

SPRINGS AT PRAIRIE CROSSING

UTILITY PLAN

C4.5

1309.381

FILE: H:\2013\1309381\DWG\1309381-SITE.DWG
RE-SAVED: 12/18/2013 1:55 PM COMMENT:
PLOTTED: 12/18/2013 1:55 PM TECH:
PLOTTED BY: DOUG MANDERNACH ENG:

List of Intakes and Utility Accesses

Structure Number ST-#	Location NORTHING	EASTING	Type or Standard Road Plan	Form Grade/Rim Elevation	Note
ST- 150			TEE	IE=	
ST- 151			TEE	IE=	
ST- 152			TEE	IE=	
ST- 153			TEE	IE=	
ST- 154			NYOPLAST DRAIN BASIN	FG= 1024.72	2.
ST- 155			TEE	IE=	
ST- 156			TEE	IE=	
ST- 157			TEE	IE=	
ST- 158			NYOPLAST DRAIN BASIN	FG= 1027.05	2.
ST- 159			TEE	IE=	
ST- 160			SW-511 INTAKE	FG= 1025.91	
ST- 161			TEE	IE=	
ST- 150A			6" ROOF DRAIN	IE= 1023.00	
ST- 151A			6" ROOF DRAIN	IE= 1023.00	
ST- 152A			6" ROOF DRAIN	IE= 1023.00	
ST- 153A			6" ROOF DRAIN	IE= 1023.00	
ST- 154A			6" ROOF DRAIN	IE= 1023.00	
ST- 155A			6" ROOF DRAIN	IE= 1025.00	
ST- 156A			6" ROOF DRAIN	IE= 1025.00	
ST- 157A			6" ROOF DRAIN	IE= 1025.00	
ST- 159A			6" ROOF DRAIN	IE= 1025.00	
ST- 161A			6" ROOF DRAIN	IE= 1025.00	
ST- 161B			6" ROOF DRAIN	IE= 1025.00	
ST- 162			SW-505 INTAKE	FG= 1025.75	
ST- 163			NYOPLAST DRAIN BASIN	FG= 1027.10	2.
ST- 164			TEE	IE=	
ST- 165			TEE	IE=	
ST- 166			TEE	IE=	
ST- 167			TEE	IE=	
ST- 168			NYOPLAST DRAIN BASIN	FG= 1026.82	2.
ST- 169			TEE	IE=	
ST- 170			TEE	IE=	
ST- 171			TEE	IE=	
ST- 172			TEE	IE=	
ST- 173			TEE	IE=	
ST- 174			TEE	IE=	
ST- 175			TEE	IE=	
ST- 176			NYOPLAST DRAIN BASIN	FG= 1027.12	2.
ST- 164A			6" ROOF DRAIN	IE= 1025.00	
ST- 165A			6" ROOF DRAIN	IE= 1025.00	
ST- 166A			6" ROOF DRAIN	IE= 1025.00	
ST- 167A			6" ROOF DRAIN	IE= 1025.00	
ST- 168A			6" ROOF DRAIN	IE= 1025.00	
ST- 169A			6" ROOF DRAIN	IE= 1025.00	
ST- 170A			6" ROOF DRAIN	IE= 1025.00	
ST- 171A			6" ROOF DRAIN	IE= 1025.00	
ST- 172A			6" ROOF DRAIN	IE= 1025.00	
ST- 173A			6" ROOF DRAIN	IE= 1025.00	
ST- 174A			6" ROOF DRAIN	IE= 1025.00	
ST- 175A			6" ROOF DRAIN	IE= 1025.00	
ST- 176A			6" ROOF DRAIN	IE= 1025.00	
ST- 177			TEE	IE=	
ST- 178			NYOPLAST DRAIN BASIN	FG= 1026.96	2.
ST- 179			NYOPLAST DRAIN BASIN	FG= 1026.96	2.
ST- 180			NYOPLAST DRAIN BASIN	FG= 1026.95	2.
ST- 177A			6" ROOF DRAIN	IE= 1025.00	
ST- 178A			6" ROOF DRAIN	IE= 1025.00	
ST- 179A			6" ROOF DRAIN	IE= 1025.00	
ST- 179B			6" ROOF DRAIN	IE= 1025.00	
ST- 181			NYOPLAST DRAIN BASIN	FG= 1026.96	2.
ST- 181A			6" ROOF DRAIN	IE= 1025.00	
ST- 181B			6" ROOF DRAIN	IE= 1025.00	
ST- 182			CROSS	IE= 1012.23	
ST- 183			NYOPLAST DRAIN BASIN	FG= 1020.46	2.
ST- 183A			6" ROOF DRAIN	IE= 1019.00	

List of Storm Sewer Pipe

Pipe Number L-#	Structure To ST-#	From ST-#	Storm Sewer Material	Diameter inches	Length feet	Slope %	FL(out)	Fl(in)	Note
L- 150	ST- 148	ST- 150	HDPE	15	24	0.50	1017.18	1017.30	
L- 151	ST- 150	ST- 151	HDPE	15	19	0.53	1017.30	1017.40	
L- 152	ST- 151	ST- 152	HDPE	15	11	0.55	1017.40	1017.46	
L- 153	ST- 152	ST- 153	HDPE	15	16	0.50	1017.46	1017.54	
L- 154	ST- 153	ST- 154	HDPE	15	24	0.50	1017.54	1017.66	
L- 155	ST- 154	ST- 155	HDPE	15	92	0.50	1017.76	1018.22	
L- 156	ST- 155	ST- 156	HDPE	15	23	0.52	1018.22	1018.34	
L- 157	ST- 156	ST- 157	HDPE	15	13	0.54	1018.34	1018.41	
L- 158	ST- 157	ST- 158	HDPE	15	8	0.50	1018.41	1018.45	
L- 159	ST- 158	ST- 159	HDPE	10	29	0.52	1018.78	1018.93	
L- 160	ST- 159	ST- 160	HDPE	10	29	0.52	1018.93	1019.08	
L- 161	ST- 160	ST- 161	HDPE	6	25	0.52	1019.35	1019.48	
L- 150A	ST- 150	ST- 150A	HDPE	6	13	7869.23		1023.00	
L- 151A	ST- 151	ST- 151A	HDPE	6	14	7307.14		1023.00	
L- 152A	ST- 152	ST- 152A	HDPE	6	7	14614.29		1023.00	
L- 153A	ST- 153	ST- 153A	HDPE	6	7	14614.29		1023.00	
L- 154A	ST- 154	ST- 154A	HDPE	6	10	10230.00		1023.00	
L- 155A	ST- 155	ST- 155A	HDPE	6	16	6406.25		1025.00	
L- 156A	ST- 156	ST- 156A	HDPE	6	13	7884.62		1025.00	
L- 157A	ST- 157	ST- 157A	HDPE	6	11	9318.18		1025.00	
L- 159A	ST- 159	ST- 159A	HDPE	6	18	5694.44		1025.00	
L- 161A	ST- 161	ST- 161A	HDPE	6	10	10250.00		1025.00	
L- 161B	ST- 161	ST- 161B	HDPE	6	8	12812.50		1025.00	
L- 162	ST- 158	ST- 162	HDPE	12	55	0.51	1018.65	1018.93	
L- 163	ST- 162	ST- 163	HDPE	10	39	0.51	1019.06	1019.26	
L- 164	ST- 163	ST- 164	HDPE	8	15	0.53	1019.39	1019.47	
L- 165	ST- 164	ST- 165	HDPE	8	20	0.50	1019.47	1019.57	
L- 166	ST- 165	ST- 166	HDPE	8	22	0.50	1019.57	1019.68	
L- 167	ST- 166	ST- 167	HDPE	8	23	0.52	1019.68	1019.80	
L- 168	ST- 167	ST- 168	HDPE	8	22	0.50	1019.80	1019.91	
L- 169	ST- 168	ST- 169	HDPE	6	33	0.52	1020.04	1020.21	
L- 170	ST- 169	ST- 170	HDPE	6	16	0.50	1020.21	1020.29	
L- 171	ST- 170	ST- 171	HDPE	6	11	0.55	1020.29	1020.35	
L- 172	ST- 171	ST- 172	HDPE	6	19	0.53	1020.35	1020.45	
L- 173	ST- 172	ST- 173	HDPE	6	21	0.52	1020.45	1020.56	
L- 174	ST- 173	ST- 174	HDPE	6	20	0.50	1020.56	1020.66	
L- 175	ST- 174	ST- 175	HDPE	6	11	0.55	1020.66	1020.72	
L- 176	ST- 175	ST- 176	HDPE	6	19	0.53	1020.72	1020.82	
L- 164A	ST- 164	ST- 164A	HDPE	6	14	7321.43		1025.00	
L- 165A	ST- 165	ST- 165A	HDPE	6	14	7321.43		1025.00	
L- 166A	ST- 166	ST- 166A	HDPE	6	9	11388.89		1025.00	
L- 167A	ST- 167	ST- 167A	HDPE	6	9	11388.89		1025.00	
L- 168A	ST- 168	ST- 168A	HDPE	6	12	8541.67		1025.00	
L- 169A	ST- 169	ST- 169A	HDPE	6	6	17083.33		1025.00	
L- 170A	ST- 170	ST- 170A	HDPE	6	6	17083.33		1025.00	
L- 171A	ST- 171	ST- 171A	HDPE	6	14	7321.43		1025.00	
L- 172A	ST- 172	ST- 172A	HDPE	6	13	7884.62		1025.00	
L- 173A	ST- 173	ST- 173A	HDPE	6	13	7884.62		1025.00	
L- 174A	ST- 174	ST- 174A	HDPE	6	15	6833.33		1025.00	
L- 175A	ST- 175	ST- 175A	HDPE	6	6	17083.33		1025.00	
L- 176A	ST- 176	ST- 176A	HDPE	6	7	14642.86		1025.00	
L- 177	ST- 163	ST- 177	HDPE	8	51	0.51	1019.39	1019.65	
L- 178	ST- 177	ST- 178	HDPE	8	8	0.50	1019.65	1019.69	
L- 179	ST- 178	ST- 179	HDPE	8	28	0.50	1019.79	1019.93	
L- 180	ST- 179	ST- 180	HDPE	6	10	0.50	1020.06	1020.11	
L- 177A	ST- 177	ST- 177A	HDPE	6	6	17083.33		1025.00	
L- 178A	ST- 178	ST- 178A	HDPE	6	15	6833.33		1025.00	
L- 179A	ST- 179	ST- 179A	HDPE	6	16	6406.25		1025.00	
L- 179B	ST- 179	ST- 179B	HDPE	6	16	6406.25		1025.00	
L- 181	ST- 179	ST- 181	HDPE	6	28	0.50	1020.06	1020.20	
L- 181A	ST- 181	ST- 181A	HDPE	6	10	10250.00		1025.00	
L- 181B	ST- 181	ST- 181B	HDPE	6	15	6833.33		1025.00	
L- 182	ST- 7	ST- 182	HDPE	6	58	1.00	1011.65	1012.23	
L- 183	ST- 182	ST- 183	HDPE	6	19	1.00	1012.23	1012.42	
L- 183A	ST- 183	ST- 183A	HDPE	6	27	24.00	1012.52	1019.00	

List of Intakes and Utility Accesses

Structure Number ST-#	Location NORTHING	EASTING	Type or Standard Road Plan	Form Grade/Rim Elevation	Note
ST- 183B			6" ROOF DRAIN	IE= 1019.00	
ST- 183C			6" ROOF DRAIN	IE= 1019.00	
ST- 183D			6" ROOF DRAIN	IE= 1019.00	
ST- 184			TEE	IE= 1012.50	
ST- 184A			6" ROOF DRAIN	IE= 1019.00	
ST- 184B			6" ROOF DRAIN	IE= 1019.00	
ST- 185			TEE	IE= 1012.40	
ST- 185A			6" ROOF DRAIN	IE= 1019.00	
ST- 185B			6" ROOF DRAIN	IE= 1019.00	
ST- 186			TEE	IE= 1012.29	
ST- 187			NYOPLAST DRAIN BASIN	FG= 1021.07	2.
ST- 188			TEE	IE= 1012.59	
ST- 189			NYOPLAST DRAIN BASIN	FG= 1020.99	2.
ST- 190			TEE	IE= 1013.09	
ST- 191			NYOPLAST DRAIN BASIN	FG= 1021.16	2.
ST- 186A			6" ROOF DRAIN	IE= 1019.00	
ST- 187A			6" ROOF DRAIN	IE= 1019.00	
ST- 188A			6" ROOF DRAIN	IE= 1019.00	
ST- 189A			6" ROOF DRAIN	IE= 1019.00	
ST- 190A			6" ROOF DRAIN	IE= 1019.00	
ST- 191A			6" ROOF DRAIN	IE= 1019.00	
ST- 191B			6" ROOF DRAIN	IE= 1019.00	
ST- 192			SW-511 INTAKE	FG= 1020.42	
ST- 193			SW-501 INTAKE	FG= 1020.55	
ST- 194			TEE	IE= 1013.32	
ST- 195			NYOPLAST DRAIN BASIN	FG= 1022.11	2.
ST- 196			TEE	IE= 1013.78	
ST- 197			TEE	IE= 1013.88	
ST- 198			TEE	IE= 1014.07	
ST- 199			NYOPLAST DRAIN BASIN	FG= 1022.05	2.
ST- 194A			6" ROOF DRAIN	IE= 1020.00	
ST- 195A			6" ROOF DRAIN	IE= 1020.00	
ST- 196A			6" ROOF DRAIN	IE= 1020.00	
ST- 197A			6" ROOF DRAIN	IE= 1020.00	
ST- 198A			6" ROOF DRAIN	IE= 1020.00	
ST- 199A			6" ROOF DRAIN	IE= 1020.00	
ST- 199B			6" ROOF DRAIN	IE= 1020.00	
ST- 200			TEE	IE= 1014.52	
ST- 201			NYOPLAST DRAIN BASIN	FG= 1021.49	2.
ST- 201D			6" ROOF DRAIN	IE= 1020.00	
ST- 201C			6" ROOF DRAIN	IE= 1020.00	
ST- 201B			6" ROOF DRAIN	IE= 1020.00	
ST- 201A			6" ROOF DRAIN	IE= 1020.00	
ST- 203			TEE	IE= 1014.95	
ST- 203A			6" ROOF DRAIN	IE= 1020.00	
ST- 203B			6" ROOF DRAIN	IE= 1020.00	
ST- 202			TEE	IE= 1015.09	
ST- 202B			6" ROOF DRAIN	IE= 1020.00	
ST- 202A			6" ROOF DRAIN	IE= 1020.00	
ST- 204			NYOPLAST DRAIN BASIN	FG= 1022.09	2.
ST- 205			TEE	IE= 1015.05	
ST- 206			TEE	IE= 1015.37	
ST- 207			NYOPLAST DRAIN BASIN	FG= 1022.17	2.
ST- 208			TEE	IE= 1015.86	
ST- 209			NYOPLAST DRAIN BASIN	FG= 1022.33	2.
ST- 205A			6" ROOF DRAIN	IE= 1020.00	
ST- 206A			6" ROOF DRAIN	IE= 1020.00	
ST- 207A			6" ROOF DRAIN	IE= 1020.00	
ST- 208A			6" ROOF DRAIN	IE= 1020.00	
ST- 209A			6" ROOF DRAIN	IE= 1020.00	
ST- 209B			6" ROOF DRAIN	IE= 1020.00	
ST- 210			SW-511 INTAKE	FG= 1021.29	
ST- 211			SW-511 INTAKE	FG= 1022.61	

List of Storm Sewer Pipe

Pipe Number L-#	Structure To ST-#	From ST-#	Storm Sewer Material	Diameter inches	Length feet	Slope %	FL(out)	Fl(in)	Note
L- 183B	ST- 183	ST- 183B	HDPE	6	33	19.64	1012.52	1019.00	
L- 183C	ST- 183	ST- 183C	HDPE	6	42	15.43	1012.52	1019.00	
L- 183D	ST- 183	ST- 183D	HDPE	6	37	17.51	1012.52	1019.00	
L- 184	ST- 182	ST- 184	HDPE	6	27	1.00	1012.23	1012.50	
L- 184A	ST- 184	ST- 184A	HDPE	6	10	65.00	1012.50	1019.00	
L- 184B	ST- 184	ST- 184B	HDPE	6	9	72.22	1012.50	1019.00	
L- 185	ST- 182	ST- 185	HDPE	6	17	1.00	1012.23	1012.40	
L- 185A	ST- 185	ST- 185A	HDPE	6	10	66.00	1012.40	1019.00	
L- 185B	ST- 185	ST- 185B	HDPE	6	9	73.33	1012.40	1019.00	
L- 186	ST- 12	ST- 186	HDPE	10	10	0.50	1012.24	1012.29	
L- 187	ST- 186	ST- 187	HDPE	10	20	0.50	1012.29	1012.39	
L- 188	ST- 187	ST- 188	HDPE	10	19	0.53	1012.49	1012.59	
L- 189	ST- 188	ST- 189	HDPE	10	9	0.56	1012.59	1012.64	
L- 190	ST- 189	ST- 190	HDPE	6	18	1.00	1012.91	1013.09	
L- 191	ST- 190	ST- 191	HDPE	6	15	1.00	1013.09	1013.24	
L- 186A	ST- 186	ST- 186A	HDPE	6	11	59.45	1012.46	1019.00	
L- 187A	ST- 187	ST- 187A	HDPE	6	7	90.57	1012.66	1019.00	
L- 188A	ST- 188	ST- 188A	HDPE	6	7	89.14	1012.76	1019.00	
L- 189A	ST- 189	ST- 189A	HDPE	6	12	50.75	1012.91	1019.00	
L- 190A	ST- 190	ST- 190A	HDPE	6	15	39.40	1013.09	1019.00	
L- 191A	ST- 191	ST- 191A	HDPE	6	15	37.73	1013.34	1019.00	
L- 191B	ST- 191	ST- 191B	HDPE	6	26	21.77	1013.34	1019.00	
L- 192	ST- 189	ST- 192	HDPE	6	18	2.00	1012.91	1013.27	
L- 193	ST- 192	ST- 193	HDPE	6	37	2.00	1013.37	1014.11	
L- 194	ST- 14	ST- 194	HDPE	6	9	1.00	1013.23	1013.32	
L- 195	ST- 194	ST- 195	HDPE	6	20	1.00	1013.32	1013.52	
L- 196	ST- 195	ST- 196	HDPE	6	16	1.00	1013.62	1013.78	
L- 197	ST- 196	ST- 197	HDPE	6	10	1.00	1013.78	1013.88	
L- 198	ST- 197	ST- 198	HDPE	6	19	1.00	1013.88	1014.07	
L- 199	ST- 198	ST- 199	HDPE	6	20	1.00	1014.07	1014.27	
L- 194A	ST- 194	ST- 194A	HDPE	6	10	66.80	1013.32	1020.00	
L- 195A	ST- 195	ST- 195A	HDPE	6	7	91.14	1013.62	1020.00	
L- 196A	ST- 196	ST- 196A	HDPE	6	7	88.86	1013.78	1020.00	
L- 197A	ST- 197	ST- 197A	HDPE	6	13	47.08	1013.88	1020.00	
L- 198A	ST- 198	ST- 198A	HDPE	6	15	39.53	1014.07	1020.00	
L- 199A	ST- 199	ST- 199A	HDPE	6	14	40.21	1014.37	1020.00	
L- 199B	ST- 199	ST- 199B	HDPE	6	23	24.48	1014.37	1020.00	
L- 200	ST- 19	ST- 200	HDPE	6	59	1.00	1013.93	1014.52	
L- 201	ST- 200	ST- 201	HDPE	6	19	1.00	1014.52	1014.71	
L- 201D	ST- 201	ST- 201D	HDPE	6	25	20.76	1014.81	1020.00	
L- 201C	ST- 201	ST- 201C	HDPE	6	31	16.74	1014.81	1020.00	
L- 201B	ST- 201	ST- 201B	HDPE	6	43	12.07	1014.81	1020.00	
L- 201A	ST- 201	ST- 201A	HDPE	6	39	13.31	1014.81	1020.00	
L- 203	ST- 200	ST- 203	HDPE	6	14	1.00	1014.81	1014.95	
L- 203A	ST- 203	ST- 203A	HDPE	6	10	50.50	1014.95	1020.00	
L- 203B	ST- 203	ST- 203B	HDPE	6	9	56.11	1014.95	1020.00	
L- 202	ST- 200	ST- 202	HDPE	6	28	1.00	1014.81	1015.09	
L- 202B	ST- 202	ST- 202B	HDPE	6	10	49.10	1015.09	1020.00	
L- 202A	ST- 202	ST- 202A	HDPE	6	9	54.56	1015.09	1020.00	
L- 204	ST- 25	ST- 204	HDPE	8	27	2.00	1014.39	1014.93	
L- 205	ST- 204	ST- 205	HDPE	8	6	2.00	1014.93	1015.05	
L- 206	ST- 205	ST- 206	HDPE	8	16	2.00	1015.05	1015.37	
L- 207	ST- 206	ST- 207	HDPE	8	9	2.00	1015.37	1015.55	
L- 208	ST- 207	ST- 208	HDPE	6	18	1.00	1015.68	1015.86	
L- 209	ST- 208	ST- 209	HDPE	6	15	1.00	1015.86	1016.01	
L- 205A	ST- 206	ST- 205A	HDPE	6	7	69.57	1015.13	1020.00	
L- 206A	ST- 206	ST- 206A	HDPE	6	7	65.00	1015.45	1020.00	
L- 207A	ST- 207	ST- 207A	HDPE	6	12	36.00	1015.68	1020.00	
L- 208A	ST- 208	ST- 208A	HDPE	6	15	27.60	1015.86	1020.00	
L- 209A	ST- 209	ST- 209A	HDPE	6	15	25.93	1016.11	1020.00	
L- 209B	ST- 209	ST- 209B	HDPE	6	27	14.41	1016.11	1020.00	
L- 210	ST- 207	ST- 210	HDPE	8	31	2.00	1015.65	1016.27	
L- 211	ST- 210	ST- 211	HDPE	8	45	2.00	1016.37	1017.27	

REVISIONS	DATE
CITY COUNCIL SUBMITTAL #3	12-16-13
SITE PLAN SUBMITTAL #3	12-10-13
SITE PLAN SUBMITTAL #2	11-26-13
SITE PLAN SUBMITTAL #1	11-12-13

3405 S.E. CROSSROADS DRIVE, SUITE G
GRIMES, IOWA 50111
PHONE: (515) 369-4400 FAX: (515) 369-4410
CIVIL DESIGN ADVANTAGE
ENGINEER: JAT
TECH: DAM

SPRINGS AT PRAIRIE CROSSING
WAUKEE, IOWA
UTILITY PLAN

C4.6
1309.381

FILE: H:\2013\1309381\DWG\1309381-SITE.DWG
FILE DATE: 12/16/13 DATE PLOTTED: 12/16/2013 1:56 PM
PLOTTED BY: DOUG MANDERNACH
COMMENT:
TECH: ENG:

List of Intakes and Utility Accesses

Structure Number ST-#	Location NORTHING	Location EASTING	Type or Standard Road Plan	Form Grade/Rim Elevation	Note
ST- 212			TEE	IE= 1016.00	
ST- 213			NYOPLAST DRAIN BASIN	FG= 1024.08	2.
ST- 214			TEE	IE= 1016.90	
ST- 215			TEE	IE= 1020.10	
ST- 216			TEE	IE= 1020.48	
ST- 217			NYOPLAST DRAIN BASIN	FG= 1024.08	2.
ST- 212A			6" ROOF DRAIN	IE= 1022.00	
ST- 213A			6" ROOF DRAIN	IE= 1022.00	
ST- 214A			6" ROOF DRAIN	IE= 1022.00	
ST- 215A			6" ROOF DRAIN	IE= 1022.00	
ST- 216A			6" ROOF DRAIN	IE= 1022.00	
ST- 217A			6" ROOF DRAIN	IE= 1022.00	
ST- 217B			6" ROOF DRAIN	IE= 1022.00	
ST- 218			TEE	IE= 1017.38	
ST- 219			NYOPLAST DRAIN BASIN	FG= 1023.92	2.
ST- 220			TEE	IE= 1017.68	
ST- 221			TEE	IE= 1017.73	
ST- 222			TEE	IE= 1017.78	
ST- 223			TEE	IE= 1017.84	
ST- 224			NYOPLAST DRAIN BASIN	FG= 1023.58	2.
ST- 225			NYOPLAST DRAIN BASIN	FG= 1023.60	2.
ST- 226			NYOPLAST DRAIN BASIN	FG= 1024.20	2.
ST- 227			TEE	IE= 1018.71	
ST- 228			NYOPLAST DRAIN BASIN	FG= 1024.27	2.
ST- 229			NYOPLAST DRAIN BASIN	FG= 1024.18	2.
ST- 230			NYOPLAST DRAIN BASIN	FG= 1024.06	2.
ST- 231			CROSS	IE= 1021.10	
ST- 218A			6" ROOF DRAIN	IE= 1022.00	
ST- 220A			6" ROOF DRAIN	IE= 1022.00	
ST- 221A			6" ROOF DRAIN	IE= 1023.00	
ST- 222A			6" ROOF DRAIN	IE= 1023.00	
ST- 223A			6" ROOF DRAIN	IE= 1022.00	
ST- 224A			6" ROOF DRAIN	IE= 1022.00	
ST- 225A			6" ROOF DRAIN	IE= 1023.00	
ST- 227A			6" ROOF DRAIN	IE= 1023.00	
ST- 231A			6" ROOF DRAIN	IE= 1023.00	
ST- 231B			6" ROOF DRAIN	IE= 1023.00	
ST- 231C			6" ROOF DRAIN	IE= 1023.00	
ST- 232			NYOPLAST DRAIN BASIN	FG= 1024.63	2.
ST- 232A			6" ROOF DRAIN	IE= 1023.00	
ST- 232B			6" ROOF DRAIN	IE= 1023.00	
ST- 233			NYOPLAST DRAIN BASIN	FG= 1023.63	2.
ST- 233A			6" ROOF DRAIN	IE= 1023.00	
ST- 234			NYOPLAST DRAIN BASIN	FG= 1023.67	2.
ST- 234A			6" ROOF DRAIN	IE= 1023.00	
ST- 234B			6" ROOF DRAIN	IE= 1022.00	
ST- 234C			6" ROOF DRAIN	IE= 1022.00	
ST- 235			TEE	IE= 1020.10	
ST- 236			TEE	IE= 1020.50	
ST- 235A			6" ROOF DRAIN	IE= 1023.00	
ST- 236A			6" ROOF DRAIN	IE= 1023.00	
ST- 236B			6" ROOF DRAIN	IE= 1023.00	
ST- 237			NYOPLAST DRAIN BASIN	FG= 1024.95	2.
ST- 238			TEE	IE= 1020.32	
ST- 239			TEE	IE= 1020.72	
ST- 238A			6" ROOF DRAIN	IE= 1023.00	
ST- 239A			6" ROOF DRAIN	IE= 1023.00	
ST- 239B			6" ROOF DRAIN	IE= 1023.00	
ST- 240			CROSS	IE= 1020.82	
ST- 240A			6" ROOF DRAIN	IE= 1023.00	
ST- 240B			6" ROOF DRAIN	IE= 1023.00	
ST- 240C			6" ROOF DRAIN	IE= 1023.00	

List of Storm Sewer Pipe

Pipe Number L-#	Structure To ST-#	Structure From ST-#	Storm Sewer Material	Diameter inches	Length feet	Slope %	FL(out)	Fl(in)	Note
L- 212	ST- 28	ST- 212	HDPE	6	7	2.00	1015.86	1016.00	
L- 213	ST- 212	ST- 213	HDPE	6	21	2.00	1016.00	1016.42	
L- 214	ST- 213	ST- 214	HDPE	6	19	2.00	1016.52	1016.90	
L- 215	ST- 214	ST- 215	HDPE	6	10	2.00	1019.90	1020.10	
L- 216	ST- 215	ST- 216	HDPE	6	19	2.00	1020.10	1020.48	
L- 217	ST- 216	ST- 217	HDPE	6	15	2.00	1020.48	1020.78	
L- 212A	ST- 212	ST- 212A	HDPE	6	9	66.67	1016.00	1022.00	
L- 213A	ST- 213	ST- 213A	HDPE	6	7	78.29	1016.52	1022.00	
L- 214A	ST- 214	ST- 214A	HDPE	6	7	72.86	1016.90	1022.00	
L- 215A	ST- 215	ST- 215A	HDPE	6	13	14.62	1020.10	1022.00	
L- 216A	ST- 216	ST- 216A	HDPE	6	15	10.13	1020.48	1022.00	
L- 217A	ST- 217	ST- 217A	HDPE	6	15	7.47	1020.88	1022.00	
L- 217B	ST- 217	ST- 217B	HDPE	6	27	4.15	1020.88	1022.00	
L- 218	ST- 31	ST- 218	HDPE	12	13	0.54	1017.31	1017.38	
L- 219	ST- 218	ST- 219	HDPE	12	23	0.52	1017.38	1017.50	
L- 220	ST- 219	ST- 220	HDPE	12	15	0.53	1017.60	1017.68	
L- 221	ST- 220	ST- 221	HDPE	12	10	0.50	1017.68	1017.73	
L- 222	ST- 221	ST- 222	HDPE	12	9	0.56	1017.73	1017.78	
L- 223	ST- 222	ST- 223	HDPE	12	12	0.50	1017.78	1017.84	
L- 224	ST- 223	ST- 224	HDPE	12	21	0.52	1017.84	1017.95	
L- 225	ST- 224	ST- 225	HDPE	12	17	0.53	1018.05	1018.14	
L- 226	ST- 225	ST- 226	HDPE	10	12	1.00	1018.27	1018.39	
L- 227	ST- 226	ST- 227	HDPE	10	22	1.00	1018.49	1018.71	
L- 228	ST- 227	ST- 228	HDPE	10	66	1.00	1018.71	1019.37	
L- 229	ST- 228	ST- 229	HDPE	6	29	2.00	1019.64	1020.22	
L- 230	ST- 229	ST- 230	HDPE	6	11	2.00	1020.32	1020.54	
L- 231	ST- 230	ST- 231	HDPE	6	23	2.00	1020.64	1021.10	
L- 218A	ST- 218	ST- 218A	HDPE	6	6	72.83	1017.63	1022.00	
L- 220A	ST- 220	ST- 220A	HDPE	6	14	29.07	1017.93	1022.00	
L- 221A	ST- 221	ST- 221A	HDPE	6	23	21.83	1017.98	1023.00	
L- 222A	ST- 222	ST- 222A	HDPE	6	39	12.74	1018.03	1023.00	
L- 223A	ST- 223	ST- 223A	HDPE	6	26	15.04	1018.09	1022.00	
L- 224A	ST- 224	ST- 224A	HDPE	6	23	15.87	1018.35	1022.00	
L- 225A	ST- 225	ST- 225A	HDPE	6	25	17.84	1018.54	1023.00	
L- 227A	ST- 227	ST- 227A	HDPE	6	22	18.73	1018.88	1023.00	
L- 231A	ST- 231	ST- 231A	HDPE	6	12	15.83	1021.10	1023.00	
L- 231B	ST- 231	ST- 231B	HDPE	6	9	21.11	1021.10	1023.00	
L- 231C	ST- 231	ST- 231C	HDPE	6	19	10.00	1021.10	1023.00	
L- 232	ST- 219	ST- 232	HDPE	6	12	2.00	1017.90	1018.14	
L- 232A	ST- 232	ST- 232A	HDPE	6	23	20.70	1018.24	1023.00	
L- 232B	ST- 232	ST- 232B	HDPE	6	24	19.83	1018.24	1023.00	
L- 233	ST- 224	ST- 233	HDPE	6	12	2.00	1018.35	1018.59	
L- 233A	ST- 233	ST- 233A	HDPE	6	26	16.58	1018.69	1023.00	
L- 234	ST- 225	ST- 234	HDPE	6	30	2.00	1018.54	1019.14	
L- 234A	ST- 234	ST- 234A	HDPE	6	37	10.16	1019.24	1023.00	
L- 234B	ST- 234	ST- 234B	HDPE	6	17	16.24	1019.24	1022.00	
L- 234C	ST- 234	ST- 234C	HDPE	6	23	12.00	1019.24	1022.00	
L- 235	ST- 228	ST- 235	HDPE	6	23	2.00	1019.64	1020.10	
L- 236	ST- 235	ST- 236	HDPE	6	20	2.00	1020.10	1020.50	
L- 235A	ST- 235	ST- 235A	HDPE	6	8	36.25	1020.10	1023.00	
L- 236A	ST- 236	ST- 236A	HDPE	6	11	22.73	1020.50	1023.00	
L- 236B	ST- 236	ST- 236B	HDPE	6	11	22.73	1020.50	1023.00	
L- 237	ST- 228	ST- 237	HDPE	6	10	2.00	1019.64	1019.84	
L- 238	ST- 237	ST- 238	HDPE	6	19	2.00	1019.94	1020.32	
L- 239	ST- 238	ST- 239	HDPE	6	20	2.00	1020.32	1020.72	
L- 238A	ST- 238	ST- 238A	HDPE	6	10	26.80	1020.32	1023.00	
L- 239A	ST- 239	ST- 239A	HDPE	6	12	19.00	1020.72	1023.00	
L- 239B	ST- 239	ST- 239B	HDPE	6	10	22.80	1020.72	1023.00	
L- 240	ST- 229	ST- 240	HDPE	6	25	2.00	1020.32	1020.82	
L- 240A	ST- 240	ST- 240A	HDPE	6	12	18.17	1020.82	1023.00	
L- 240B	ST- 240	ST- 240B	HDPE	6	10	21.80	1020.82	1023.00	
L- 240C	ST- 240	ST- 240C	HDPE	6	19	11.47	1020.82	1023.00	

List of Intakes and Utility Accesses

Structure Number ST-#	Location NORTHING	Location EASTING	Type or Standard Road Plan	Form Grade/Rim Elevation	Note
ST- 241			TEE	IE= 1019.04	
ST- 242			NYOPLAST DRAIN BASIN	FG= 1024.92	2.
ST- 243			NYOPLAST DRAIN BASIN	FG= 1024.61	2.
ST- 244			TEE	IE= 1020.28	
ST- 245			NYOPLAST DRAIN BASIN	FG= 1026.49	2.
ST- 246			TEE	IE= 1020.89	
ST- 247			NYOPLAST DRAIN BASIN	FG= 1026.19	2.
ST- 248			TEE	IE= 1021.69	
ST- 249			TEE	IE= 1021.95	
ST- 250			NYOPLAST DRAIN BASIN	FG= 1024.65	2.
ST- 251			NYOPLAST DRAIN BASIN	FG= 1024.92	2.
ST- 241A			6" ROOF DRAIN	IE= 1023.00	
ST- 242A			6" ROOF DRAIN	IE= 1025.00	
ST- 242B			6" ROOF DRAIN	IE= 1023.00	
ST- 243A			6" ROOF DRAIN	IE= 1025.00	
ST- 243B			6" ROOF DRAIN	IE= 1023.00	
ST- 243C			6" ROOF DRAIN	IE= 1023.00	
ST- 244A			6" ROOF DRAIN	IE= 1025.00	
ST- 245A			6" ROOF DRAIN	IE= 1025.00	
ST- 245B			6" ROOF DRAIN	IE= 1023.00	
ST- 246A			6" ROOF DRAIN	IE= 1025.00	
ST- 247A			6" ROOF DRAIN	IE= 1025.00	
ST- 249A			6" ROOF DRAIN	IE= 1023.00	
ST- 250A			6" ROOF DRAIN	IE= 1023.00	
ST- 251A			6" ROOF DRAIN	IE= 1023.00	
ST- 251B			6" ROOF DRAIN	IE= 1023.00	
ST- 252			NYOPLAST DRAIN BASIN	FG= 1024.90	2.
ST- 252A			6" ROOF DRAIN	IE= 1025.00	
ST- 253			TEE	IE=	
ST- 253A			6" ROOF DRAIN	IE= 1025.00	
ST- 253B			6" ROOF DRAIN	IE= 1025.00	
ST- 254			NYOPLAST DRAIN BASIN	FG= 1027.11	2.
ST- 255			SW-511 INTAKE	FG= 1026.30	
ST- 256			NYOPLAST DRAIN BASIN	FG= 1027.16	2.
ST- 254A			6" ROOF DRAIN	IE= 1025.00	
ST- 256A			6" ROOF DRAIN	IE= 1025.00	
ST- 256B			6" ROOF DRAIN	IE= 1025.00	
ST- 256C			6" ROOF DRAIN	IE= 1025.00	
ST- 257			TEE	IE=	
ST- 257A			6" ROOF DRAIN	IE= 1025.00	
ST- 257B			6" ROOF DRAIN	IE= 1025.00	
ST- 258			TEE	IE= 1021.72	
ST- 259			TEE	IE= 1021.82	
ST- 260			TEE	IE= 1022.01	
ST- 261			NYOPLAST DRAIN BASIN	FG= 1027.25	2.
ST- 262			TEE	IE= 1022.56	
ST- 263			SW-511 INTAKE	FG= 1026.14	
ST- 264			NYOPLAST DRAIN BASIN	FG= 1027.11	2.
ST- 258A			6" ROOF DRAIN	IE= 1025.00	
ST- 259A			6" ROOF DRAIN	IE= 1025.00	
ST- 260A			6" ROOF DRAIN	IE= 1025.00	
ST- 261A			6" ROOF DRAIN	IE= 1025.00	
ST- 262A			6" ROOF DRAIN	IE= 1025.00	
ST- 264A			6" ROOF DRAIN	IE= 1025.00	
ST- 265			TEE	IE=	
ST- 265A			6" ROOF DRAIN	IE= 1025.00	
ST- 265B			6" ROOF DRAIN	IE= 1025.00	
ST- EX5			EX SW-401 MANHOLE	RIM= 1026.65	
ST- EX6			EX 30" RCP APRON	FL= 1019.74	

List of Storm Sewer Pipe

Pipe Number L-#	Structure To ST-#	Structure From ST-#	Storm Sewer Material	Diameter inches	Length feet	Slope %	FL(out)	Fl(in)	Note
L- 241	ST- 42	ST- 241	HDPE	8	18	1.22	1019.09	1019.31	
L- 242	ST- 241	ST- 242	HDPE	8	16	1.19	1019.31	1019.50	
L- 243	ST- 252	ST- 243	HDPE	8	33	1.00	1019.60	1019.93	
L- 244	ST- 243	ST- 244	HDPE	8	25	1.00	1020.03	1020.28	
L- 245	ST- 244	ST- 245	HDPE	8	3	1.00	1020.28	1020.31	
L- 246	ST- 245	ST- 246	HDPE	6	21	2.00	1020.47	1020.89	
L- 247	ST- 246	ST- 247	HDPE	6	15	2.00	1020.89	1021.19	
L- 248	ST- 247	ST- 248	HDPE	6	20	2.00	1021.29	1021.69	
L- 249	ST- 248	ST- 249	HDPE	6	13	2.00	1021.69	1021.95	
L- 250	ST- 249	ST- 250	HDPE	6	16	2.00	1021.95	1022.27	
L- 251	ST- 250	ST- 251	HDPE	6	20	2.00	1022.37	1022.77	
L- 241A	ST- 241	ST- 241A	HDPE	6	12	30.08	1019.39	1023.00	
L- 242A	ST- 242	ST- 242A	HDPE	6	30	17.90	1019.63	1025.00	
L- 242B	ST- 242	ST- 242B	HDPE	6	15	22.47	1019.63	1023.00	
L- 243A	ST- 243	ST- 243A	HDPE	6	30	16.47	1020.06	1025.00	
L- 243B	ST- 243	ST- 243B	HDPE	6	20	14.70	1020.06	1023.00	
L- 243C	ST- 243	ST- 243C	HDPE	6	22	13.36	1020.06	1023.00	
L- 244A	ST- 244	ST- 244A	HDPE	6	30	15.47	1020.36	1025.00	
L- 245A	ST- 245	ST- 245A	HDPE	6	25	18.12	1020.47	1025.00	
L- 245B	ST- 245	ST- 245B	HDPE	6	36	7.03	1020.47	1023.00	
L- 246A	ST- 246	ST- 246A	HDPE	6	24	3767.13	120.89	1025.00	
L- 247A	ST- 247	ST- 247A	HDPE	6	25	14.84	1021.29	1025.00	
L- 249A	ST- 249	ST- 249A	HDPE	6	30	3.50	1021.95	1023.00	
L- 250A	ST- 250	ST- 250A	HDPE	6	23	2.74	1022.37	1023.00	
L- 251A	ST- 251	ST- 251A	HDPE	6	19	1.00	1022.87	1023.06	
L- 251B	ST- 251	ST- 251B	HDPE	6	24	1.00	1022.87	1023.11	
L- 252	ST- 251	ST- 252	HDPE	6	14	2.00	1022.87	1023.15	
L- 252A	ST- 252	ST- 252A	HDPE	6	16	10.94	1023.25	1025.00	
L- 253	ST- 248	ST- 253	HDPE	6	29	2.00	1021.69	1022.27	
L- 253A	ST- 253	ST- 253A	HDPE	6	3	87.67	1022.37	1025.00	
L- 253B	ST- 253	ST- 253B	HDPE	6	12	31.08	1021.27	1025.00	
L- 254	ST- 48	ST- 254	HDPE	8	34	1.00	1020.43	1020.77	
L- 255	ST- 254	ST- 255	HDPE	8	39	1.00	1020.87	1021.26	
L- 256	ST- 255	ST- 256	HDPE	6	37	2.00	1021.39	1022.13	
L- 254A	ST- 254	ST- 254A	HDPE	6	7	58.57	1020.90	1025.00	
L- 256A	ST- 256	ST- 256A	HDPE	6	24	11.54	1022.23	1025.00	
L- 256B	ST- 256	ST- 256B	HDPE	6	14	19.79	1022.23	1025.00	
L- 256C	ST- 256	ST- 256C	HDPE	6	23	12.04	1022.23	1025.00	
L- 257	ST- 255	ST- 257	HDPE	6	28	2.00	1021.39	1021.95	
L- 257A	ST- 257	ST- 257A	HDPE	6	11	26.82	1022.05	1025.00	
L- 257B	ST- 257	ST- 257B	HDPE	6	5	59.00	1022.05	1025.00	
L- 258	ST- 50	ST- 258	HDPE	8	22	1.00	1021.50	1021.72	
L- 259	ST- 258	ST- 259	HDPE	8	10	1.00	1021.72	1021.82	
L- 260	ST- 259	ST- 260	HDPE	8	19	1.00	1021.82	1022.01	
L- 261	ST- 260	ST- 261	HDPE	8	22	1.00	1022.01	1022.23	
L- 262	ST- 261	ST- 262	HDPE	6	10	2.00	1022.36	1022.56	
L- 263	ST- 262	ST- 263	HDPE	6	52	2.00	1022.56	1023.60	
L- 264	ST- 263	ST- 264	HDPE	6	23	2.00	1023.70	1024.16	
L- 258A	ST- 258	ST- 258A	HDPE	6	7	45.71	1021.80	1025.00	
L- 259A	ST- 259	ST- 259A	HDPE	6	13	23.85	1021.90	1025.00	
L- 260A	ST- 260	ST- 260A	HDPE	6	15	19.40	1022.09	1025.00	
L- 261A	ST- 261	ST- 261A	HDPE	6	13	20.31	1022.36	1025.00	
L- 262A	ST- 262	ST- 262A	HDPE	6	19	12.84	1022.56	1025.00	
L- 264A	ST- 264	ST- 264A	HDPE	6	7	10.57	1024.26	1025.00	
L- 265	ST- 263	ST- 265	HDPE	6	26	2.00	1023.70	1024.22	
L- 265A	ST- 265	ST- 265A	HDPE	6	10	7.80	1024.22	1025.00	
L- 265B	ST- 265	ST- 265B	HDPE	6	6	13.00	1024.22	1025.00	
L- EX6	ST- EX5	ST- EX6	RCP	30	26	0.46	1019.62	1019.74	1.

REVISIONS	DATE
CITY COUNCIL SUBMITTAL #3	12-16-13
SITE PLAN SUBMITTAL #3	12-10-13
SITE PLAN SUBMITTAL #2	11-26-13
SITE PLAN SUBMITTAL #1	11-12-13

3405 S.E. CROSSROADS DRIVE, SUITE G
GRIMES, IOWA 50111
PHONE: (515) 369-4400 FAX: (515) 369-4410
CIVIL DESIGN ADVANTAGE
ENGINEER: JAT TECH: DAM

SPRINGS AT PRAIRIE CROSSING
UTILITY PLAN
WAUKEE, IOWA

C4.7
1309.381

FILE: H:\2013\1309381\DWG\1309381-SITE.DWG
FILE DATE: 12/16/13 DATE PLOTTED: 12/16/2013 1:56 PM
PLOTTED BY: DOUG MANDERNACH
COMMENT:
TECH: ENG:

List of Intakes and Utility Accesses

Structure Number ST-#	Location NORTHING	Location EASTING	Type or Standard Road Plan	Form Grade/Rim Elevation	Note
ST- 269			30" CMP APRON	FL= 1020.00	
ST- 270			SW-401 MH	RIM= 1026.30	
ST- 271			NYOPLAST DRAIN BASIN	FG= 1028.06	2.
ST- 272			TEE	IE= 1022.07	
ST- 273			NYOPLAST DRAIN BASIN	FG= 1028.11	2.
ST- 274			TEE	IE= 1022.37	
ST- 275			TEE	IE= 1022.43	
ST- 276			NYOPLAST DRAIN BASIN	FG= 1028.76	2.
ST- 277			TEE	IE= 1023.23	
ST- 278			TEE	IE= 1023.23	
ST- 279			TEE	IE= 1023.39	
ST- 280			NYOPLAST DRAIN BASIN	FG= 1027.95	2.
ST- 281			TEE	IE= 1023.68	
ST- 282			NYOPLAST DRAIN BASIN	FG= 1026.84	2.
ST- 283			SW-511 INTAKE	FG= 1026.13	
ST- 272A			6" ROOF DRAIN	IE= 1026.00	
ST- 273A			6" ROOF DRAIN	IE= 1026.00	
ST- 274A			6" ROOF DRAIN	IE= 1026.00	
ST- 275A			6" ROOF DRAIN	IE= 1026.00	
ST- 276A			6" ROOF DRAIN	IE= 1026.00	
ST- 277A			6" ROOF DRAIN	IE= 1026.00	
ST- 278A			6" ROOF DRAIN	IE= 1026.00	
ST- 279A			6" ROOF DRAIN	IE= 1026.00	
ST- 280A			6" ROOF DRAIN	IE= 1026.00	
ST- 281A			6" ROOF DRAIN	IE= 1026.00	
ST- 282A			6" ROOF DRAIN	IE= 1025.00	
ST- 284			SW-511 INTAKE	FG= 1026.61	
ST- 285			NYOPLAST DRAIN BASIN	FG= 1027.97	
ST- 286			TEE	IE= 1023.72	
ST- 287			TEE	IE= 1023.95	
ST- 288			TEE	IE= 1024.03	
ST- 289			NYOPLAST DRAIN BASIN	FG= 1028.87	
ST- 290			TEE	IE= 1024.35	
ST- 291			NYOPLAST DRAIN BASIN	FG= 1029.20	
ST- 292			TEE	IE=	
ST- 286A			6" ROOF DRAIN	IE= 1027.00	
ST- 287A			6" ROOF DRAIN	IE= 1027.00	
ST- 288A			6" ROOF DRAIN	IE= 1027.00	
ST- 289A			6" ROOF DRAIN	IE= 1027.00	
ST- 290A			6" ROOF DRAIN	IE= 1027.00	
ST- 291A			6" ROOF DRAIN	IE= 1027.00	
ST- 292A			6" ROOF DRAIN	IE= 1027.00	
ST- 292B			6" ROOF DRAIN	IE= 1027.00	
ST- 293			TEE	IE= 1023.63	
ST- 294			TEE	IE= 1023.76	
ST- 295			TEE	IE= 1023.00	
ST- 296			NYOPLAST DRAIN BASIN	FG= 1028.74	
ST- 297			TEE	IE= 1024.25	
ST- 298			SW-511 INTAKE	FG= 1028.16	
ST- 299			TEE	IE= 1024.77	
ST- 300			NYOPLAST DRAIN BASIN	FG= 1029.17	
ST- 301			SW-511 INTAKE	FG= 1028.09	
ST- 302			TEE	IE= 1025.59	
ST- 303			NYOPLAST DRAIN BASIN	FG= 1029.09	
ST- 304			NYOPLAST DRAIN BASIN	FG= 1029.09	
ST- 293A			6" ROOF DRAIN	IE= 1027.00	
ST- 294A			6" ROOF DRAIN	IE= 1027.00	
ST- 295A			6" ROOF DRAIN	IE= 1027.00	
ST- 297A			6" ROOF DRAIN	IE= 1027.00	
ST- 305			TEE	IE= 1025.08	
ST- 305A			6" ROOF DRAIN	IE= 1027.00	
ST- 305B			6" ROOF DRAIN	IE= 1027.00	
ST- 299A			6" ROOF DRAIN	IE= 1027.00	
ST- 300A			6" ROOF DRAIN	IE= 1027.00	
ST- 300B			6" ROOF DRAIN	IE= 1027.00	
ST- 306			TEE	IE= 1025.76	
ST- 306A			6" ROOF DRAIN	IE= 1027.00	
ST- 306B			6" ROOF DRAIN	IE= 1027.00	
ST- 303A			6" ROOF DRAIN	IE= 1027.00	
ST- 304A			6" ROOF DRAIN	IE= 1027.00	

List of Storm Sewer Pipe

Pipe Number L-#	Structure To ST-#	Structure From ST-#	Storm Sewer Material	Diameter inches	Length feet	Slope %	FL(out)	Fl(in)	Note
L- 270	ST- 269	ST- 270	HDPE	30	233	0.40	1020.00	1020.94	1.
L- 271	ST- 270	ST- 271	HDPE	30	141	0.40	1021.04	1021.60	
L- 272	ST- 271	ST- 272	HDPE	24	14	0.50	1022.00	1022.07	
L- 273	ST- 272	ST- 273	HDPE	24	19	0.53	1022.07	1022.17	
L- 274	ST- 273	ST- 274	HDPE	24	20	0.50	1022.27	1022.37	
L- 275	ST- 274	ST- 275	HDPE	24	11	0.55	1022.37	1022.43	
L- 276	ST- 275	ST- 276	HDPE	24	15	0.53	1022.43	1022.51	
L- 277	ST- 276	ST- 277	HDPE	15	24	0.50	1023.11	1023.23	
L- 278	ST- 277	ST- 278	HDPE	15	19	0.53	1023.23	1023.33	
L- 279	ST- 278	ST- 279	HDPE	15	11	0.55	1023.33	1023.39	
L- 280	ST- 279	ST- 280	HDPE	15	19	0.53	1023.39	1023.49	
L- 281	ST- 280	ST- 281	HDPE	15	17	0.53	1023.59	1023.68	
L- 282	ST- 281	ST- 282	HDPE	15	37	0.51	1023.68	1023.87	
L- 283	ST- 282	ST- 283	HDPE	12	19	0.53	1024.07	1024.17	
L- 272A	ST- 272	ST- 272A	HDPE	6	10	31.80	1022.82	1026.00	
L- 273A	ST- 273	ST- 273A	HDPE	6	7	37.57	1023.37	1026.00	
L- 274A	ST- 274	ST- 274A	HDPE	6	7	41.14	1023.12	1026.00	
L- 275A	ST- 275	ST- 275A	HDPE	6	16	17.63	1023.18	1026.00	
L- 276A	ST- 276	ST- 276A	HDPE	6	13	17.62	1023.71	1026.00	
L- 277A	ST- 277	ST- 277A	HDPE	6	13	24.15	1022.86	1026.00	
L- 278A	ST- 278	ST- 278A	HDPE	6	14	21.71	1022.96	1026.00	
L- 279A	ST- 279	ST- 279A	HDPE	6	7	42.57	1023.02	1026.00	
L- 280A	ST- 280	ST- 280A	HDPE	6	7	27.29	1024.09	1026.00	
L- 281A	ST- 281	ST- 281A	HDPE	6	14	13.86	1024.06	1026.00	
L- 282A	ST- 282	ST- 282A	HDPE	6	23	2.30	1024.47	1025.00	
L- 284	ST- 270	ST- 284	HDPE	18	51	0.71	1022.40	1022.76	
L- 285	ST- 284	ST- 285	HDPE	15	40	0.50	1022.96	1023.16	
L- 286	ST- 285	ST- 286	HDPE	8	11	0.82	1023.63	1023.72	
L- 287	ST- 286	ST- 287	HDPE	8	29	0.79	1023.72	1023.95	
L- 288	ST- 287	ST- 288	HDPE	8	10	0.80	1023.95	1024.03	
L- 289	ST- 288	ST- 289	HDPE	8	28	0.79	1024.03	1024.25	
L- 290	ST- 289	ST- 290	HDPE	6	17	1.00	1024.18	1024.35	
L- 291	ST- 290	ST- 291	HDPE	6	21	1.00	1024.35	1024.56	
L- 292	ST- 291	ST- 292	HDPE	6	22	1.00	1024.66	1024.88	
L- 286A	ST- 286	ST- 286A	HDPE	6	9	35.00	1023.85	1027.00	
L- 287A	ST- 287	ST- 287A	HDPE	6	9	34.56	1023.89	1027.00	
L- 288A	ST- 288	ST- 288A	HDPE	6	15	18.67	1024.20	1027.00	
L- 289A	ST- 289	ST- 289A	HDPE	6	17	16.59	1024.18	1027.00	
L- 290A	ST- 290	ST- 290A	HDPE	6	16	16.56	1024.35	1027.00	
L- 291A	ST- 291	ST- 291A	HDPE	6	17	13.76	1024.66	1027.00	
L- 292A	ST- 292	ST- 292A	HDPE	6	11	19.27	1024.88	1027.00	
L- 292B	ST- 292	ST- 292B	HDPE	6	8	26.50	1024.88	1027.00	
L- 293	ST- 285	ST- 293	HDPE	12	45	0.60	1023.36	1023.63	
L- 294	ST- 293	ST- 294	HDPE	12	22	0.59	1023.63	1023.76	
L- 295	ST- 294	ST- 295	HDPE	12	13	0.62	1023.76	1023.84	
L- 296	ST- 295	ST- 296	HDPE	12	15	0.60	1023.84	1023.93	
L- 297	ST- 296	ST- 297	HDPE	12	46	0.50	1024.02	1024.25	
L- 298	ST- 297	ST- 298	HDPE	12	32	0.50	1024.25	1024.41	
L- 299	ST- 298	ST- 299	HDPE	10	38	0.61	1024.54	1024.77	
L- 300	ST- 299	ST- 300	HDPE	10	10	0.60	1024.77	1024.83	
L- 301	ST- 300	ST- 301	HDPE	8	38	1.00	1024.89	1025.27	
L- 302	ST- 301	ST- 302	HDPE	6	19	1.00	1025.40	1025.59	
L- 303	ST- 302	ST- 303	HDPE	6	21	1.00	1025.59	1025.80	
L- 304	ST- 303	ST- 304	HDPE	6	16	1.00	1025.90	1026.06	
L- 293A	ST- 293	ST- 293A	HDPE	6	13	24.00	1023.88	1027.00	
L- 294A	ST- 294	ST- 294A	HDPE	6	18	16.61	1024.01	1027.00	
L- 295A	ST- 295	ST- 295A	HDPE	6	22	13.23	1024.09	1027.00	
L- 297A	ST- 297	ST- 297A	HDPE	6	19	13.16	1024.50	1027.00	
L- 305	ST- 298	ST- 305	HDPE	6	27	1.00	1024.81	1025.08	
L- 305A	ST- 305	ST- 305A	HDPE	6	6	32.00	1025.08	1027.00	
L- 305B	ST- 305	ST- 305B	HDPE	6	11	17.45	1025.08	1027.00	
L- 299A	ST- 299	ST- 299A	HDPE	6	21	9.81	1024.94	1027.00	
L- 300A	ST- 300	ST- 300A	HDPE	6	14	7.86	1025.90	1027.00	
L- 300B	ST- 300	ST- 300B	HDPE	6	24	4.58	1025.90	1027.00	
L- 306	ST- 302	ST- 306	HDPE	6	17	1.00	1025.59	1025.76	
L- 306A	ST- 306	ST- 306A	HDPE	6	6	20.67	1025.76	1027.00	
L- 306B	ST- 306	ST- 306B	HDPE	6	11	11.27	1025.76	1027.00	
L- 303A	ST- 303	ST- 303A	HDPE	6	9	12.22	1025.90	1027.00	
L- 304A	ST- 304	ST- 304A	HDPE	6	9	9.33	1026.16	1027.00	

List of Intakes and Utility Accesses

Structure Number ST-#	Location NORTHING	Location EASTING	Type or Standard Road Plan	Form Grade/Rim Elevation	Note
ST- 307			NYOPLAST DRAIN BASIN	FG= 1028.16	
ST- 308			TEE	IE= 1023.13	
ST- 309			TEE	IE= 1023.25	
ST- 310			NYOPLAST DRAIN BASIN	FG= 1027.70	
ST- 311			NYOPLAST DRAIN BASIN	FG= 1026.37	
ST- 312			TEE	IE= 1024.01	
ST- 313			NYOPLAST DRAIN BASIN	FG= 1027.96	
ST- 314			NYOPLAST DRAIN BASIN	FG= 1027.96	
ST- 315			NYOPLAST DRAIN BASIN	FG= 1027.96	
ST- 307A			6" ROOF DRAIN	IE= 1026.00	
ST- 308A			6" ROOF DRAIN	IE= 1026.00	
ST- 309A			6" ROOF DRAIN	IE= 1026.00	
ST- 310A			6" ROOF DRAIN	IE= 1026.00	
ST- 312A			6" ROOF DRAIN	IE= 1026.00	
ST- 313A			6" ROOF DRAIN	IE= 1026.00	
ST- 314A			6" ROOF DRAIN	IE= 1026.00	
ST- 314B			6" ROOF DRAIN	IE= 1026.00	
ST- 315A			6" ROOF DRAIN	IE= 1026.00	
ST- 315B			6" ROOF DRAIN	IE= 1026.00	
ST- 316			SW-511 INTAKE	FG= 1027.44	
ST- 317			NYOPLAST DRAIN BASIN	FG= 1028.86	
ST- 318			TEE	IE= 1023.81	
ST- 319			TEE	IE= 1023.94	
ST- 320			SW-511 INTAKE	FG= 1028.40	
ST- 321			TEE	IE= 1024.40	
ST- 322			NYOPLAST DRAIN BASIN	FG= 1029.21	
ST- 323			TEE	IE= 1024.70	
ST- 324			SW-511 INTAKE	FG= 1028.63	
ST- 325			NYOPLAST DRAIN BASIN	FG= 1029.10	
ST- 326			NYOPLAST DRAIN BASIN	FG= 1028.89	
ST- 327			TEE	IE= 1026.25	
ST- 328			TEE	IE= 1026.38	
ST- 329			NYOPLAST DRAIN BASIN	FG= 1029.10	
ST- 318A			6" ROOF DRAIN	IE= 1027.00	
ST- 319A			6" ROOF DRAIN	IE= 1027.00	
ST- 330			TEE	IE= 1024.98	
ST- 330A			6" ROOF DRAIN	IE= 1027.00	
ST- 330B			6" ROOF DRAIN	IE= 1027.00	
ST- 321A			6" ROOF DRAIN	IE= 1027.00	
ST- 322A			6" ROOF DRAIN	IE= 1027.00	
ST- 323A			6" ROOF DRAIN	IE= 1027.00	
ST- 324A			6" ROOF DRAIN	IE= 1027.00	
ST- 325A			6" ROOF DRAIN	IE= 1027.00	
ST- 325B			6" ROOF DRAIN	IE= 1027.00	
ST- 331			SW-501 INTAKE	FG= 1028.38	
ST- 327A			6" ROOF DRAIN	IE= 1027.00	
ST- 328A			6" ROOF DRAIN	IE= 1027.00	
ST- 329A			6" ROOF DRAIN	IE= 1027.00	
ST- 329B			6" ROOF DRAIN	IE= 1027.00	
ST- 332			TEE	IE= 1023.74	
ST- 333			TEE	IE= 1023.84	
ST- 334			TEE	IE= 1024.00	
ST- 335			NYOPLAST DRAIN BASIN	FG= 1026.49	
ST- 336			TEE	IE= 1024.58	
ST- 337			NYOPLAST DRAIN BASIN	FG= 1026.55	
ST- 338			NYOPLAST DRAIN BASIN	FG= 1026.75	
ST- 339			NYOPLAST DRAIN BASIN	FG= 1027.91	
ST- 340			TEE	IE= 1025.65	
ST- 341			NYOPLAST DRAIN BASIN	FG= 1027.06	
ST- 342			NYOPLAST DRAIN BASIN	FG= 1026.62	
ST- 343			TEE	IE= 1026.10	
ST- 344			TEE	IE= 1026.20	
ST- 345			NYOPLAST DRAIN BASIN	FG=	
ST- 332A			6" ROOF DRAIN	IE= 1027.00	
ST- 333A			6" ROOF DRAIN	IE= 1027.00	
ST- 334A			6" ROOF DRAIN	IE= 1027.00	
ST- 334B					
ST- 334C					

List of Storm Sewer Pipe

Pipe Number L-#	Structure To ST-#	Structure From ST-#	Storm Sewer Material	Diameter inches	Length feet	Slope %	FL(out)	Fl(in)	Note
L- 307	ST- 271	ST- 307	HDPE	12	21	0.52	1022.80	1022.91	
L- 308	ST- 307	ST- 308	HDPE	12	24	0.50	1023.01	1023.13	
L- 309	ST- 308	ST- 309	HDPE	12	23	0.52	1023.13	1023.25	
L- 310	ST- 309	ST- 310	HDPE	12	18	0.50	1023.25	1023.34	
L- 311	ST- 310	ST- 311	HDPE	12	29	0.52	1023.44	1023.59	
L- 312	ST- 311	ST- 312	HDPE	8	29	0.52	1023.86	1024.01	
L- 313	ST- 312	ST- 313	HDPE	8	6	0.50	1024.01	1024.04	
L- 314	ST- 313	ST- 314	HDPE	6	28	1.00	1024.17	1024.45	
L- 315	ST- 314	ST- 315	HDPE	6	28	1.00	1024.55	1024.83	
L- 307A	ST- 307	ST- 307A	HDPE	6	13	21.54	1023.20	1026.00	
L- 308A	ST- 308	ST- 308A	HDPE	6	11	28.36	1022.88	1026.00	
L- 309A	ST- 309	ST- 309A	HDPE	6	12	20.83	1023.50	1026.00	
L- 310A	ST- 310	ST- 310A	HDPE	6	8	28.25	1023.74	1026.00	
L- 312A	ST- 312	ST- 312A	HDPE	6	9	21.22	1024.09	1026.00	
L- 313A	ST- 313	ST- 313A	HDPE	6	15	12.20	1024.17	1026.00	
L- 314A	ST- 314	ST- 314A	HDPE	6	16	9.06	1024.55	1026.00	
L- 314B	ST- 314	ST- 314B	HDPE	6	16	9.06	1024.55	1026.00	
L- 315A	ST- 315	ST- 315A	HDPE	6	15	7.13	1024.93	1026.00	
L- 315B	ST- 315	ST- 315B	HDPE	6	10	10.70	1024.93	1026.00	
L- 316	ST- 276	ST- 316	HDPE	18	23	0.91	1022.91	1023.12	
L- 317	ST- 316	ST- 317	HDPE	18	41	0.80	1023.22	1023.55	
L- 318	ST- 317	ST- 318	HDPE	15	11	0.55	1023.75	1023.81	
L- 319	ST- 318	ST- 319	HDPE	15	25	0.52	1023.81	1023.94	
L- 320	ST- 319	ST- 320	HDPE	15	34	0.50	1023.94	1024.11	
L- 321	ST- 320	ST- 321	HDPE	15	38	0.50	1024.21	1024.40	
L- 322	ST- 321	ST- 322	HDPE	15	8	0.50	1024.40	1024.44	
L- 323	ST- 322	ST- 323	HDPE	12	12	0.50	1024.64	1024.70	
L- 324	ST- 323	ST- 324	HDPE	12	29	0.52	1024.80	1024.95	
L- 325	ST- 324	ST- 325	HDPE	8	37	1.00	1025.22	1025.59	
L- 326	ST- 325	ST- 326	HDPE	8	27	1.00	1025.69	1025.96	
L- 327	ST- 326	ST- 327	HDPE	6	16	1.00	1026.09	1026.25	
L- 328	ST- 327	ST- 328	HDPE	6	13	1.00	1026.25	1026.38	
L- 329	ST- 328	ST- 329	HDPE	6	18	1.00	1026.38	1026.56	
L- 318A	ST- 318	ST- 318A	HDPE	6	14	20.07	1024.19	1027.00	
L- 319A	ST- 319	ST- 319A	HDPE	6	18	14.89	1024.32	1027.00	
L- 330	ST- 320	ST- 330	HDPE	6	27	1.00	1024.71	1024.98	
L- 330A	ST- 330	ST- 330A	HDPE	6	6	33.67	1024.98	1027.00	
L- 330B	ST- 330	ST- 330B	HDPE	6	11	18.36	1024.98	1027.00	
L- 321A	ST- 321	ST- 321A	HDPE	6	20	11.10	1024.78	1027.00	
L- 322A	ST- 322	ST- 322A	HDPE	6	13	15.08	1025.04	1027.00	
L- 323A	ST- 323	ST- 323A	HDPE	6	24	8.54	1024.95	1027.00	
L- 324A	ST- 324	ST- 324A	HDPE	6	32	5.16	1025.35	1027.00	
L- 325A	ST- 325	ST- 325A	HDPE	6	8	16.00	1025.72	1027.00	
L- 325B	ST- 325	ST- 325B	HDPE	6	21	6.10	1025.72	1027.00	
L- 331	ST- 326	ST- 331	HDPE	6	15	1.00	1026.09	1026.24	
L- 327A	ST- 327	ST- 327A	HDPE	6	9	8.33	1026.25	1027.00	
L- 328A	ST- 328	ST- 328A	HDPE	6	9	6.89	1026.38	1027.00	
L- 329A	ST- 329	ST- 329A	HDPE	6	9	3.78	1026.66	1027.00	
L- 329B	ST- 329	ST- 329B	HDPE	6	28	1.21	1026.66	1027.00	
L- 332	ST- 317	ST- 332	HDPE	18	21	0.43	1023.65	1023.74	
L- 333	ST- 332	ST- 333	HDPE	18	23	0.43	1023.74	1023.84	
L- 334	ST- 333	ST- 334	HDPE	18	38	0.42	1023.84	1024.00	
L- 335	ST- 334	ST- 335	HDPE	18	29	0.41	1024.00	1024.12	
L- 336	ST- 335	ST- 336	HDPE	15	52	0.50	1024.32	1024.58	
L- 337	ST- 336	ST- 337	HDPE	15	15	0.53	1024.58	1024.66	
L- 338	ST- 337	ST- 338	HDPE	15	34	0.50	1024.76	1024.93	
L- 339	ST- 338	ST- 339	HDPE	10	48	0.50	1025.26	1025.50	
L- 340	ST- 339	ST- 340	HDPE	10	10	0.50	1025.60	1025.65	
L- 341	ST- 340	ST- 341	HDPE	10	28	0.50	1025.65	1025.79	
L- 342	ST- 341	ST- 342	HDPE	8	10	0.50	1025.92	1025.97	
L- 343	ST- 342	ST- 343	HDPE	8	26	0.50	1026.07	1026.20	
L- 344	ST- 343	ST- 344	HDPE	8	20	0.50	1026.20	1026.30	
L- 345	ST- 344	ST- 345	HDPE	8	25	0.52	1026.30	1026.43	
L- 332A	ST- 332	ST- 332A	HDPE	6	17	16.24	1024.24	1027.00	
L- 333A	ST- 333	ST- 333A	HDPE	6	19	14.00	1024.34	1027.00	
L- 334A	ST- 334	ST- 334A	HDPE	6	33	7.58	1024.50	1027.00	
L- 334B		ST- 334B							
L- 334C									

DATE	REVISIONS
12-16-13	CITY COUNCIL SUBMITTAL #3
12-10-13	SITE PLAN SUBMITTAL #3
11-26-13	SITE PLAN SUBMITTAL #2
11-12-13	SITE PLAN SUBMITTAL #1

3405 S.E. CROSSROADS DRIVE, SUITE G
GRIMES, IOWA 50111
PHONE: (515) 369-4400 FAX: (515) 369-4410

ENGINEER: JAT | TECH: DAM

CIVIL DESIGN ADVANTAGE

WAUKEE, IOWA

SPRINGS AT PRAIRIE CROSSING

UTILITY PLAN

C4.8

1309.381

FILE: H:\2013\1309381\DWG\1309381-SITE.DWG
PLOT DATE/TIME: 12/16/2013 1:56 PM COMMENT:
PLOTTED BY: DOUG MANDERNACH TECH: ENG:

List of Intakes and Utility Accesses

Structure Number ST-#	Location NORTHING	Location EASTING	Type or Standard Road Plan	Form Grade/Rim Elevation	Note
ST- 346			TEE	IE= 1025.31	
ST- 346A			6" ROOF DRAIN	IE= 1025.00	
ST- 346B			6" ROOF DRAIN	IE= 1025.00	
ST- 337A			6" ROOF DRAIN	IE= 1025.00	
ST- 347			TEE	IE= 1025.63	
ST- 347A			6" ROOF DRAIN	IE= 1027.00	
ST- 347B			6" ROOF DRAIN	IE= 1027.00	
ST- 338A			6" ROOF DRAIN	IE= 1025.00	
ST- 338B			6" ROOF DRAIN	IE= 1025.00	
ST- 348			NYOPLAST DRAIN BASIN	FG= 1027.35	
ST- 349			TEE	IE= 1025.98	
ST- 349A			6" ROOF DRAIN	IE= 1027.00	
ST- 349B			6" ROOF DRAIN	IE= 1027.00	
ST- 339A			6" ROOF DRAIN	IE= 1027.00	
ST- 350			TEE	IE=	
ST- 350A			6" ROOF DRAIN	IE= 1025.00	
ST- 350B			6" ROOF DRAIN	IE= 1025.00	
ST- 351			TEE	IE=	
ST- 351A			6" ROOF DRAIN	IE= 1027.00	
ST- 351B			6" ROOF DRAIN	IE= 1027.00	
ST- 341A			6" ROOF DRAIN	IE= 1027.00	
ST- 343A			6" ROOF DRAIN	IE= 1026.42	
ST- 344A			6" ROOF DRAIN	IE= 1026.52	
ST- 345A			6" ROOF DRAIN	IE= 1026.65	
ST- 345B			6" ROOF DRAIN	IE= 1026.76	
ST- 352			NYOPLAST DRAIN BASIN	FG= 1026.12	
ST- 353			TEE	IE= 1025.30	
ST- 354			TEE	IE= 1025.73	
ST- 355			TEE	IE= 1025.96	
ST- 356			CLEAN OUT	IE= 1026.10	
ST- 353A			6" ROOF DRAIN	IE= 1025.44	
ST- 354A			6" ROOF DRAIN	IE= 1025.83	
ST- 355A			6" ROOF DRAIN	IE= 1026.06	
ST- 356A			6" ROOF DRAIN	IE= 1026.20	
ST- 357			TEE	IE= 1024.18	
ST- 358			NYOPLAST DRAIN BASIN	FG= 1027.10	
ST- 359			TEE	IE= 1024.53	
ST- 360			NYOPLAST DRAIN BASIN	FG= 1026.37	
ST- 361			NYOPLAST DRAIN BASIN	FG= 1026.51	
ST- 362			NYOPLAST DRAIN BASIN	FG= 1027.37	
ST- 363			TEE	IE= 1025.68	
ST- 357A			6" ROOF DRAIN	IE= 1025.00	
ST- 358A			6" ROOF DRAIN	IE= 1025.00	
ST- 365			NYOPLAST DRAIN BASIN	FG= 1027.32	
ST- 365A			6" ROOF DRAIN	IE= 1026.00	
ST- 365B			6" ROOF DRAIN	IE= 1026.00	
ST- 359A			6" ROOF DRAIN	IE= 1025.00	
ST- 360A			6" ROOF DRAIN	IE= 1025.00	
ST- 363A			6" ROOF DRAIN	IE= 1026.00	
ST- 363B			6" ROOF DRAIN	IE= 1026.00	
ST- 366			8" CMP APRON	FL= 1020.00	
ST- 367			SW-501 INTAKE	FG= 1026.62	
ST- 368			SW-501 INTAKE	FG= 1026.43	
ST- 369			SW-501 INTAKE	FG= 1026.43	
ST- 370			NYOPLAST DRAIN BASIN	FG= 1028.37	
ST- 371			NYOPLAST DRAIN BASIN	FG= 1029.04	
ST- 370A			6" ROOF DRAIN	IE= 1027.00	
ST- 370B			6" ROOF DRAIN	IE= 1027.00	
ST- 371A			6" ROOF DRAIN	IE= 1027.00	
ST- 371B			6" ROOF DRAIN	IE= 1027.00	

Notes:
1. INSTALL TYPE BEEHIVE GRATE.
2. DRAIN BASINS SHALL BE A MINIMUM 24" DIA. CONTRACTOR TO VERIFY IF LARGER DIAMETER IS REQUIRED DUE TO PIPE CONNECTIONS. STANDARD GRATES SHALL BE UTILIZED UNLESS NOTED.
3. INSTALL TYPE SOLID COVER.

List of Storm Sewer Pipe

Pipe Number L-#	Structure To ST-#	Structure From ST-#	Storm Sewer Material	Storm Sewer Diameter inches	Storm Sewer Length feet	Storm Sewer Slope %	FL(out)	Fl(in)	Note
L- 346	ST- 336	ST- 346	HDPE	6	35	1.00	1024.96	1025.31	
L- 346A	ST- 346	ST- 346A	HDPE	6	11	1.00	1025.31	1025.42	
L- 346B	ST- 346	ST- 346B	HDPE	6	5	1.00	1025.31	1025.36	
L- 337A	ST- 337	ST- 337A	HDPE	6	38	1.00	1025.26	1025.64	
L- 347	ST- 337	ST- 347	HDPE	6	37	1.00	1025.26	1025.63	
L- 347A	ST- 347	ST- 347A	HDPE	6	8	17.12	1025.63	1027.00	
L- 347B	ST- 347	ST- 347B	HDPE	6	9	15.22	1025.63	1027.00	
L- 338A	ST- 338	ST- 338A	HDPE	6	38	1.00	1025.53	1025.91	
L- 338B	ST- 338	ST- 338B	HDPE	6	38	1.00	1025.53	1025.91	
L- 348	ST- 338	ST- 348	HDPE	6	10	1.00	1025.53	1025.63	
L- 349	ST- 348	ST- 349	HDPE	6	25	1.00	1025.73	1025.98	
L- 349A	ST- 349	ST- 349A	HDPE	6	11	9.27	1025.98	1027.00	
L- 349B	ST- 349	ST- 349B	HDPE	6	27	3.78	1025.98	1027.00	
L- 339A	ST- 339	ST- 339A	HDPE	6	36	3.42	1025.77	1027.00	
L- 350	ST- 339	ST- 350	HDPE	6	39	1.00	1025.77	1026.16	
L- 350A	ST- 350	ST- 350A	HDPE	6	6	1.00	1026.16	1026.22	
L- 350B	ST- 350	ST- 350B	HDPE	6	12	1.00	1026.16	1026.28	
L- 351	ST- 340	ST- 351	HDPE	6	25	1.00	1025.82	1026.07	
L- 351A	ST- 351	ST- 351A	HDPE	6	10	9.30	1026.07	1027.00	
L- 351B	ST- 351	ST- 351B	HDPE	6	9	10.33	1026.07	1027.00	
L- 341A	ST- 341	ST- 341A	HDPE	6	29	3.24	1026.06	1027.00	
L- 343A	ST- 343	ST- 343A	HDPE	6	14	1.00	1026.28	1026.42	
L- 344A	ST- 344	ST- 344A	HDPE	6	14	1.00	1026.38	1026.52	
L- 345A	ST- 345	ST- 345A	HDPE	6	9	1.00	1026.56	1026.65	
L- 345B	ST- 345	ST- 345B	HDPE	6	20	1.00	1026.56	1026.76	
L- 352	ST- 335	ST- 352	HDPE	8	18	1.06	1024.79	1024.98	
L- 353	ST- 352	ST- 353	HDPE	6	19	1.00	1025.11	1025.30	
L- 354	ST- 353	ST- 354	HDPE	6	43	1.00	1025.30	1025.73	
L- 355	ST- 354	ST- 355	HDPE	6	23	1.00	1025.73	1025.96	
L- 356	ST- 355	ST- 356	HDPE	6	14	1.00	1025.96	1026.10	
L- 353A	ST- 353	ST- 353A	HDPE	6	14	1.00	1025.30	1025.44	
L- 354A	ST- 354	ST- 354A	HDPE	6	10	1.00	1025.73	1025.83	
L- 355A	ST- 355	ST- 355A	HDPE	6	10	1.00	1025.96	1026.06	
L- 356A	ST- 356	ST- 356A	HDPE	6	10	1.00	1026.10	1026.20	
L- 357	ST- 282	ST- 357	HDPE	12	22	0.50	1024.07	1024.18	
L- 358	ST- 357	ST- 358	HDPE	12	14	0.50	1024.18	1024.25	
L- 359	ST- 358	ST- 359	HDPE	10	29	0.52	1024.38	1024.53	
L- 360	ST- 359	ST- 360	HDPE	10	21	0.52	1024.53	1024.64	
L- 361	ST- 360	ST- 361	HDPE	8	12	0.50	1024.77	1024.83	
L- 362	ST- 361	ST- 362	HDPE	6	47	1.00	1024.96	1025.43	
L- 363	ST- 362	ST- 363	HDPE	6	15	1.00	1025.53	1025.68	
L- 357A	ST- 357	ST- 357A	HDPE	6	22	2.59	1024.43	1025.00	
L- 358A	ST- 358	ST- 358A	HDPE	6	23	1.52	1024.65	1025.00	
L- 365	ST- 358	ST- 365	HDPE	6	13	1.00	1024.65	1024.78	
L- 365A	ST- 365	ST- 365A	HDPE	6	28	4.00	1024.88	1026.00	
L- 365B	ST- 365	ST- 365B	HDPE	6	35	3.20	1024.88	1026.00	
L- 359A	ST- 359	ST- 359A	HDPE	6	27	1.11	1024.70	1025.00	
L- 360A	ST- 360	ST- 360A	HDPE	6	26	1.00	1024.91	1025.17	
L- 363A	ST- 363	ST- 363A	HDPE	6	7	4.57	1025.68	1026.00	
L- 363B	ST- 363	ST- 363B	HDPE	6	27	1.00	1025.68	1025.95	
L- 367	ST- 366	ST- 367	HDPE	8	59	4.36	1020.00	1022.57	1.
L- 368	ST- 367	ST- 368	HDPE	8	80	1.00	1022.67	1023.47	
L- 369	ST- 368	ST- 369	HDPE	8	44	1.00	1023.57	1024.01	
L- 370	ST- 369	ST- 370	HDPE	6	40	1.00	1024.14	1024.54	
L- 371	ST- 370	ST- 371	HDPE	6	36	1.00	1024.64	1025.00	
L- 370A	ST- 370	ST- 370A	HDPE	6	18	13.11	1024.64	1027.00	
L- 370B	ST- 370	ST- 370B	HDPE	6	20	11.80	1024.64	1027.00	
L- 371A	ST- 371	ST- 371A	HDPE	6	19	10.00	1025.10	1027.00	
L- 371B	ST- 371	ST- 371B	HDPE	6	14	13.57	1025.10	1027.00	

Notes:
1. INCLUDES APRON LENGTH
2. CONTRACTOR TO USE ADS N-12 FOR ALL STORM SEWER WITH LESS THAN 3 FEET OF COVER UNDER PAVEMENT.

REVISIONS	DATE
CITY COUNCIL SUBMITTAL #3	12-16-13
SITE PLAN SUBMITTAL #3	12-10-13
SITE PLAN SUBMITTAL #2	11-26-13
SITE PLAN SUBMITTAL #1	11-12-13

3405 S.E. CROSSROADS DRIVE, SUITE G
GRIMES, IOWA 50111
PHONE: (515) 369-4400 FAX: (515) 369-4410
ENGINEER: JAT | TECH: DAM

CIVIL DESIGN ADVANTAGE

SPRINGS AT PRAIRIE CROSSING

WAUKEE, IOWA

UTILITY PLAN

C4.9

1309.381

FILE: H:\2013\1309381\DWG\1309381-SITE.DWG
PLOT DATE: 12/16/2013
PLOTTED BY: DOUG MANDERNACH
LAST CUTTED: 12/16/2013 1:56 PM
COMMENT:
TECH:
ENG:

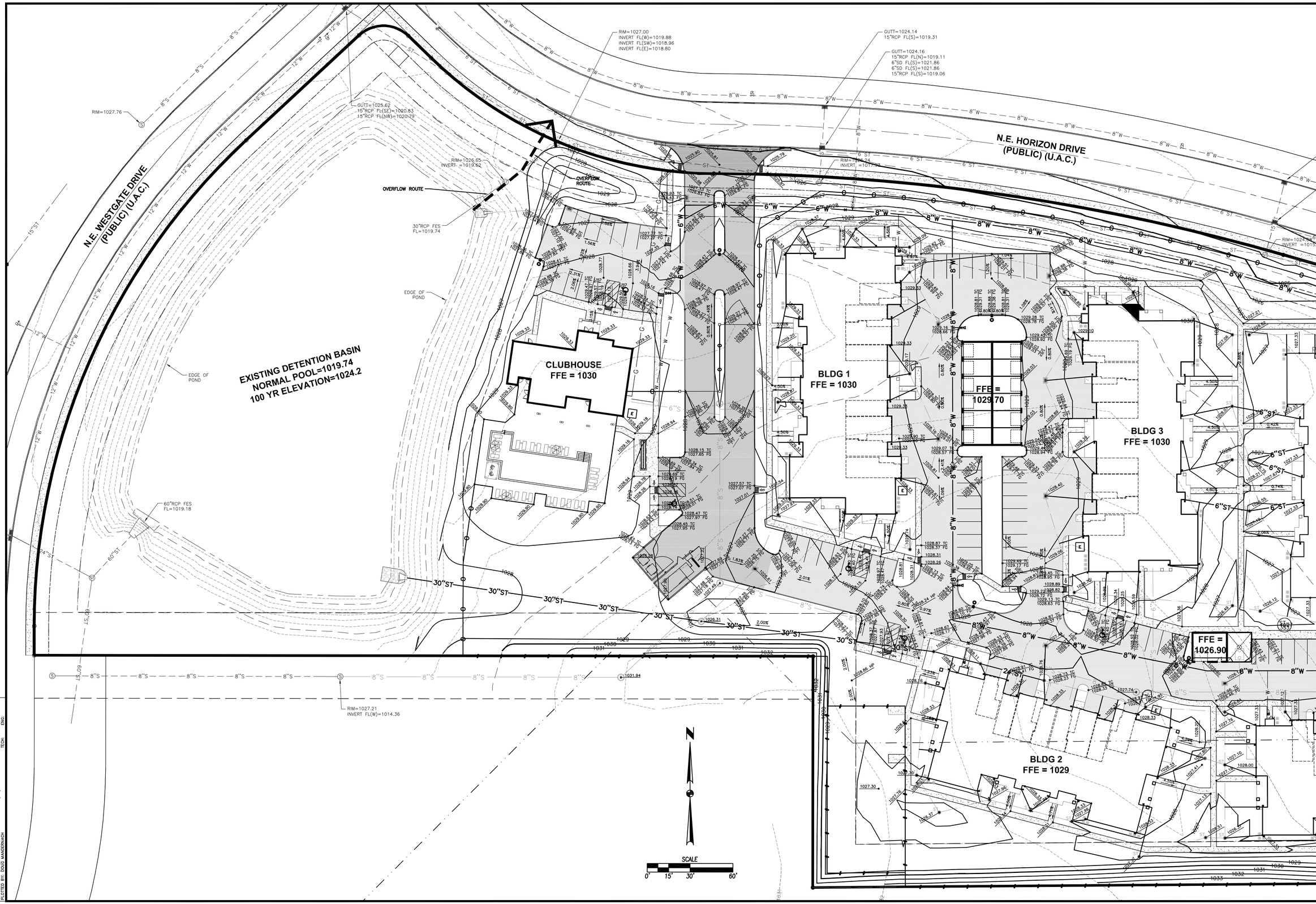

REVISIONS	DATE
CITY COUNCIL SUBMITTAL #3	12-16-13
SITE PLAN SUBMITTAL #3	12-10-13
SITE PLAN SUBMITTAL #2	11-26-13
SITE PLAN SUBMITTAL #1	11-12-13

3405 S.E. CROSSROADS DRIVE, SUITE G
GRIMES, IOWA 50111
PHONE: (515) 369-4400 FAX: (515) 369-4410
ENGINEER: JAT
TECH: DAM
CIVIL DESIGN ADVANTAGE

SPRINGS AT PRAIRIE CROSSING

GRADING PLAN

WAUKEE, IOWA

C5.1

1309.381

FILE: H:\2013\1309381\DWG\1309381-SITE.DWG
FILE DATE: 12/16/13 DATE PLOTTED: 12/16/2013 1:57 PM
PLOTTED BY: DOUG MANDERNACH
COMMENT:
TECH: ENG:

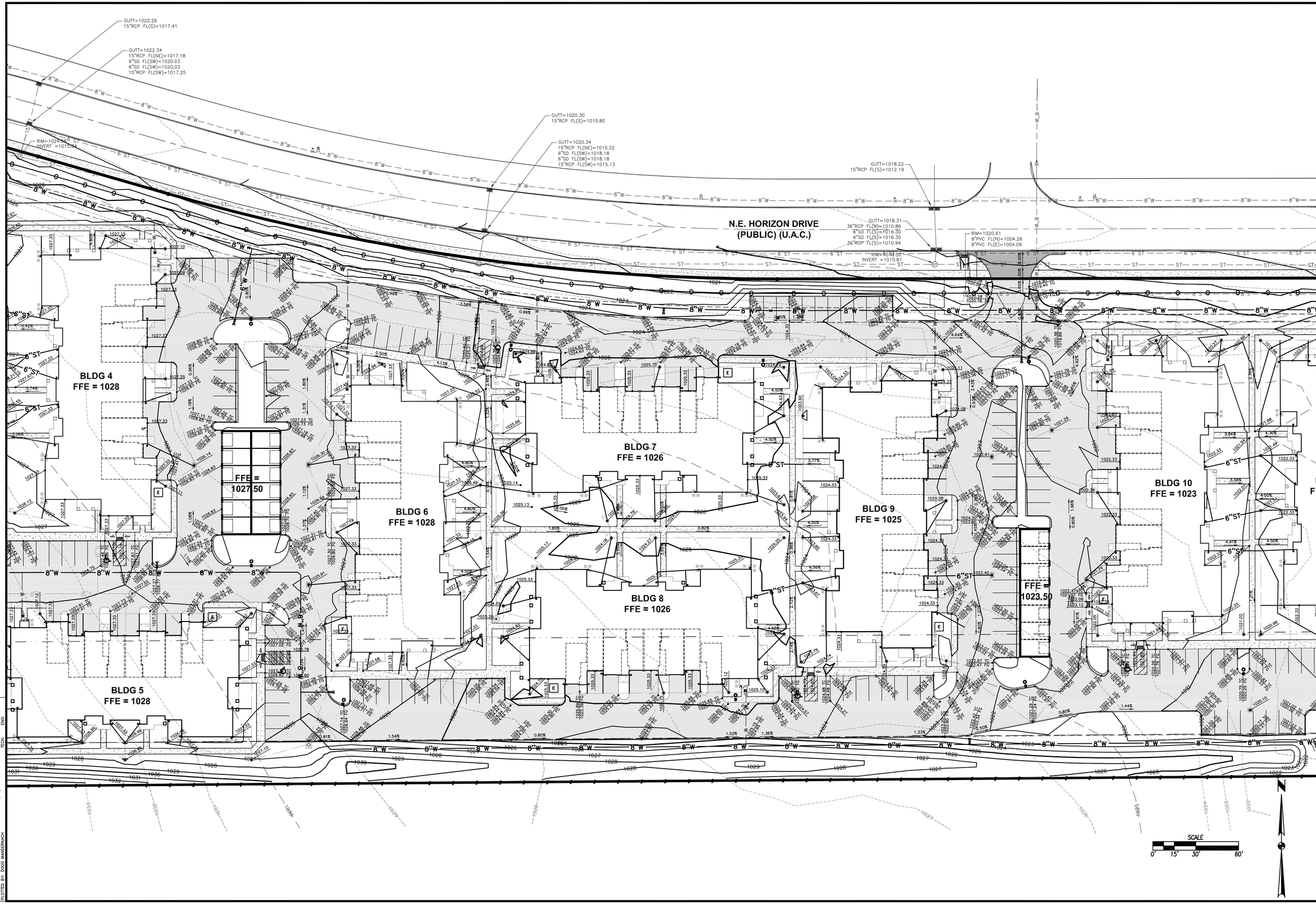

REVISIONS	DATE
CITY COUNCIL SUBMITTAL #3	12-16-13
SITE PLAN SUBMITTAL #3	12-10-13
SITE PLAN SUBMITTAL #2	11-26-13
SITE PLAN SUBMITTAL #1	11-12-13

3405 S.E. CROSSROADS DRIVE, SUITE G
GRIMES, IOWA 50111
PHONE: (515) 369-4400 FAX: (515) 369-4410
ENGINEER: JAT
TECH: DAM
CIVIL DESIGN ADVANTAGE

SPRINGS AT PRAIRIE CROSSING

GRADING PLAN

WAUKEE, IOWA

C5.2

1309.381

FILE: H:\2013\1309381\DWG\1309381-SITE.DWG
FILE DATE: 12/16/13 DATE PLOTTED: 12/16/2013 1:57 PM
PLOTTED BY: DOUG MANDERNACH
COMMENT: ENG:
TECH:

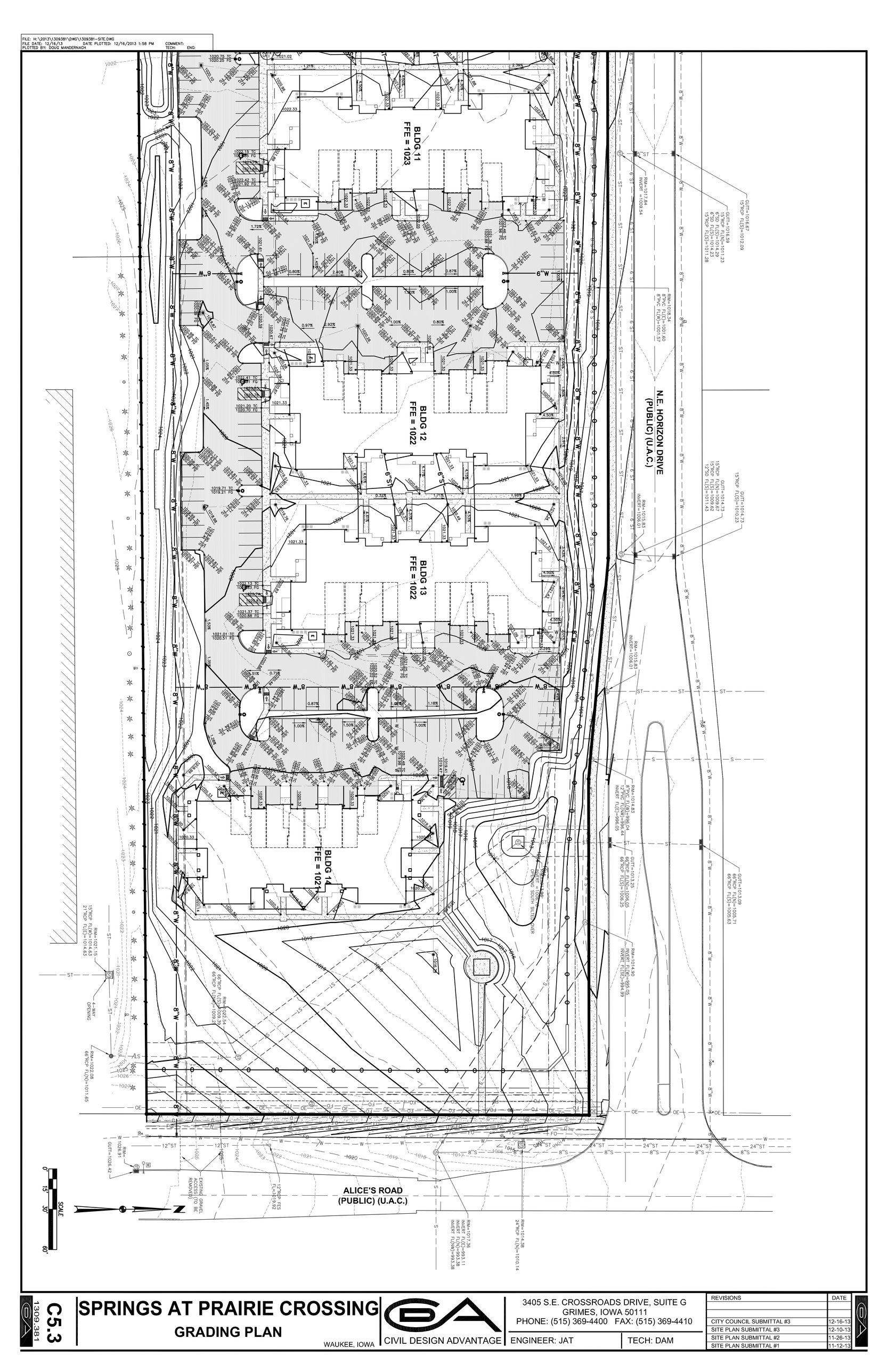

C5.3
1309.381

SPRINGS AT PRAIRIE CROSSING
GRADING PLAN

WAUKEE, IOWA

CIVIL DESIGN ADVANTAGE

3405 S.E. CROSSROADS DRIVE, SUITE G
GRIMES, IOWA 50111
PHONE: (515) 369-4400 FAX: (515) 369-4410

ENGINEER: JAT | TECH: DAM

REVISIONS	DATE
CITY COUNCIL SUBMITTAL #3	12-16-13
SITE PLAN SUBMITTAL #3	12-10-13
SITE PLAN SUBMITTAL #2	11-26-13
SITE PLAN SUBMITTAL #1	11-12-13

SPRINGS AT PRAIRIE CROSSING

EROSION AND SEDIMENT CONTROL PLAN

VICINITY MAP

NOT TO SCALE

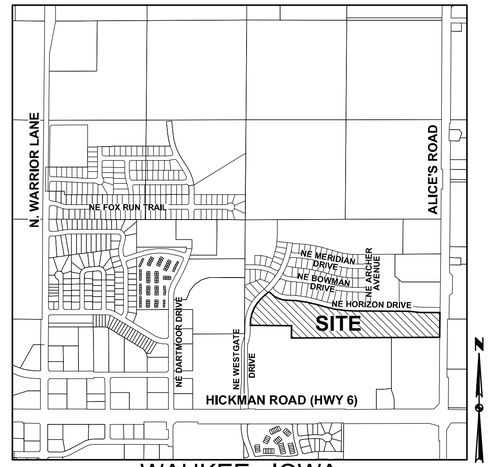

WAUKEE, IOWA

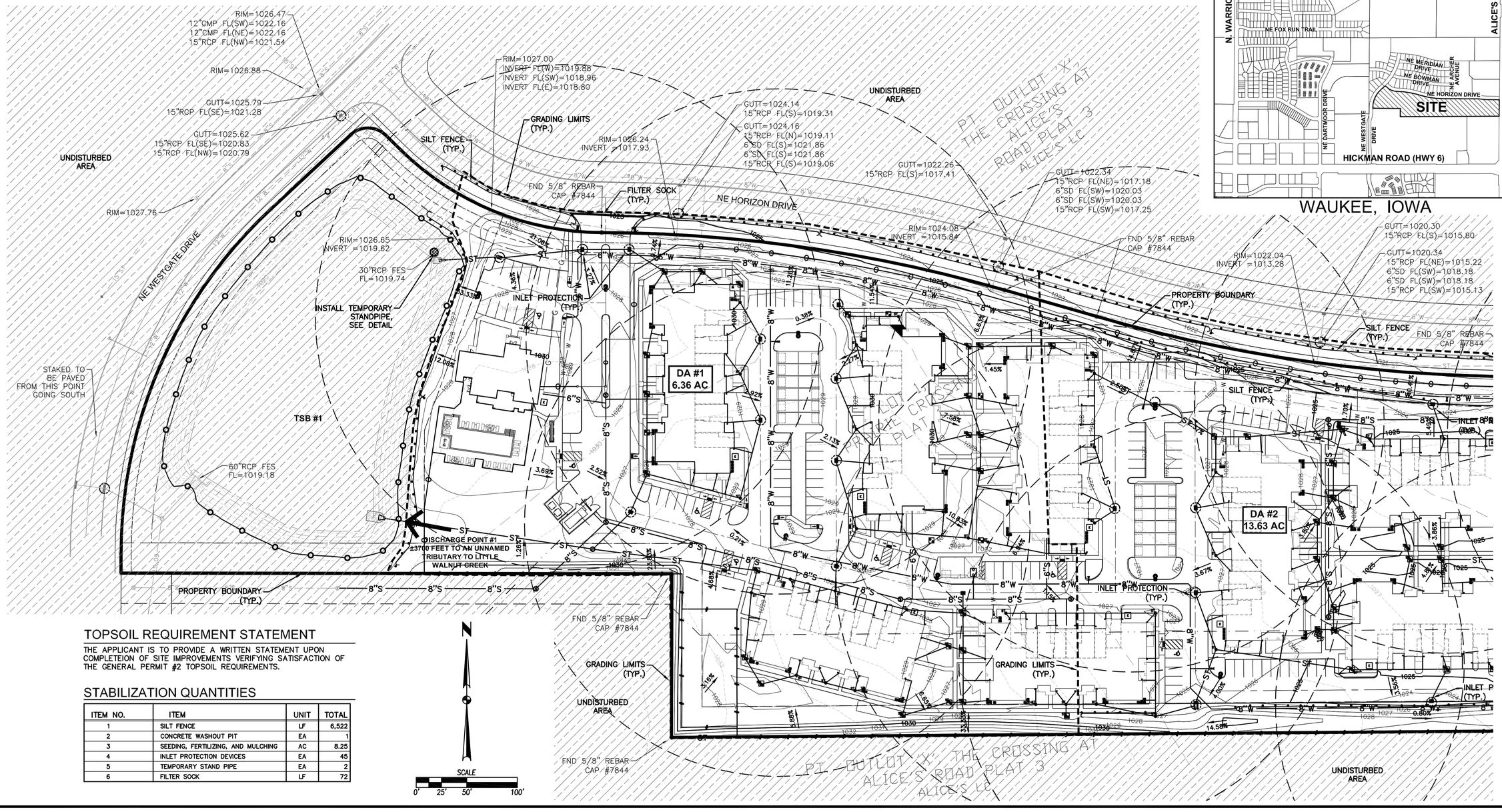

TOPSOIL REQUIREMENT STATEMENT

THE APPLICANT IS TO PROVIDE A WRITTEN STATEMENT UPON COMPLETEION OF SITE IMPROVEMENTS VERIFYING SATISFACTION OF THE GENERAL PERMIT #2 TOPSOIL REQUIREMENTS.

STABILIZATION QUANTITIES

ITEM NO.	ITEM	UNIT	TOTAL
1	SILT FENCE	LF	6,522
2	CONCRETE WASHOUT PIT	EA	1
3	SEEDING, FERTILIZING, AND MULCHING	AC	8.25
4	INLET PROTECTION DEVICES	EA	45
5	TEMPORARY STAND PIPE	EA	2
6	FILTER SOCK	LF	72

REVISIONS	DATE
CITY COUNCIL SUBMITTAL #3	12-16-13
SITE PLAN SUBMITTAL #3	12-10-13
SITE PLAN SUBMITTAL #2	11-26-13
SITE PLAN SUBMITTAL #1	11-12-13

3405 S.E. CROSSROADS DRIVE, SUITE G
GRIMES, IOWA 50111
PHONE: (515) 369-4400 FAX: (515) 369-4410

ENGINEER: JAT | TECH: DAM

CIVIL DESIGN ADVANTAGE

SPRINGS AT PRAIRIE CROSSING
EROSION AND SEDIMENT CONTROL PLAN
WAUKEE, IOWA

C6.1

1309.381

FILE: H:\2013\1309381\DWG\1309381-SWPPP.DWG
PLOT DATE/TIME: 12/16/2013 2:03 PM
PLOTTED BY: DOUG MANDERNACH
COMMENT:
TECH: ENG:

SPRINGS AT PRAIRIE CROSSING

EROSION AND SEDIMENT CONTROL PLAN

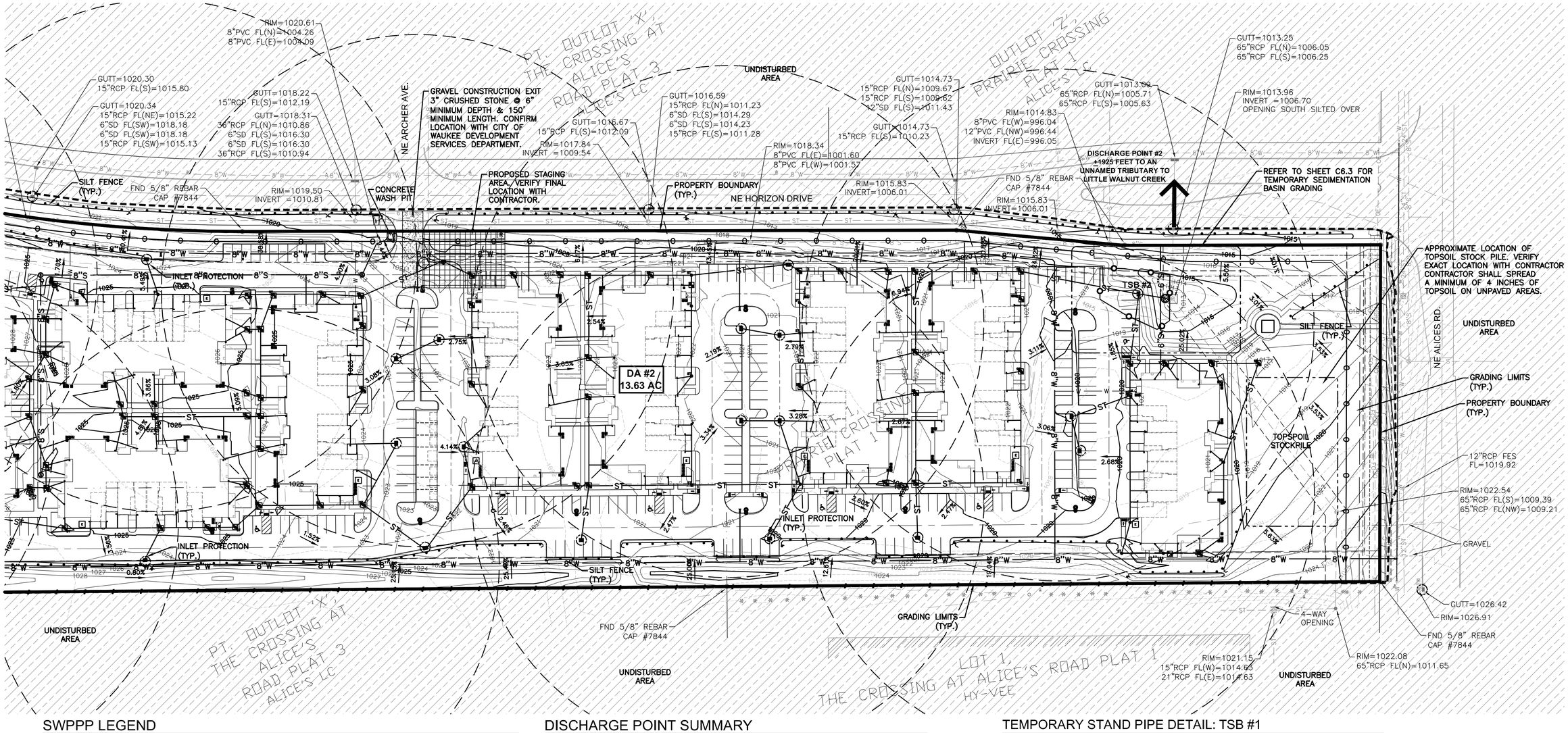

SWPPP LEGEND

- DRAINAGE ARROW (X.XX %)
- GRADING LIMITS
- FILTER SOCK
- SILT FENCE
- DITCH CHECK
- INLET PROTECTION
- PORTABLE RESTROOM (R)
- CONCRETE WASHOUT PIT
- TEMPORARY STANDPIPE
- AREA TO BE SEEDED
- STRAW MAT
- UNDISTURBED AREA
- RIPRAP
- GRAVEL ENTRANCE
- STAGING AREA
- TEMPORARY SEDIMENT TRAP (TST #)
- TEMPORARY SEDIMENT BASIN (TSB #)

DISCHARGE POINT SUMMARY

DISCHARGE POINT #1 ±3700 FEET TO AN UNNAMED TRIBUTARY TO LITTLE WALNUT CREEK	
TOTAL AREA DISTURBED TO DISCHARGE POINT	6.36 ACRES
STORAGE VOLUME REQUIRED (# OF ACRES*3600 CU FT)	22,896 CU FT
VOLUME PROVIDED IN FILTER SOCK (72 LF @ 2.0 CU FT/LF OF SOCK)	144 CU FT
VOLUME PROVIDED IN MISCELLANEOUS SILT FENCE (13,083 SF – CALCULATED)	6,542 CU FT
VOLUME PROVIDED IN TSB#1	99,561 CU FT
TOTAL VOLUME PROVIDED	106,247 CU FT
DISCHARGE POINT #2 ±1925 FEET TO AN UNNAMED TRIBUTARY TO LITTLE WALNUT CREEK	
TOTAL AREA DISTURBED TO DISCHARGE POINT	13.63 ACRES
STORAGE VOLUME REQUIRED (# OF ACRES*3600 CU FT)	49,068 CU FT
VOLUME PROVIDED IN SILT FENCE @ 3:1/4:1 (1,397 LF @ 4.5 CU FT/LF OF FENCE)	6,287 CU FT
VOLUME PROVIDED IN MISCELLANEOUS SILT FENCE (68,779 SF – CALCULATED)	34,390 CU FT
VOLUME PROVIDED IN TSB#2	9,004 CU FT
TOTAL VOLUME PROVIDED	49,681 CU FT

TEMPORARY STAND PIPE DETAIL: TSB #1

NOT TO SCALE

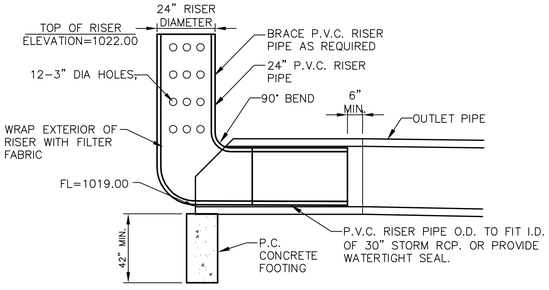

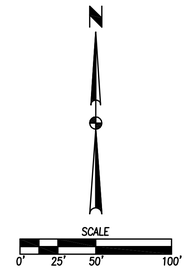

REVISIONS	DATE
CITY COUNCIL SUBMITTAL #3	12-16-13
SITE PLAN SUBMITTAL #3	12-10-13
SITE PLAN SUBMITTAL #2	11-26-13
SITE PLAN SUBMITTAL #1	11-12-13

3405 S.E. CROSSROADS DRIVE, SUITE G
GRIMES, IOWA 50111
PHONE: (515) 369-4400 FAX: (515) 369-4410
ENGINEER: JAT | TECH: DAM

CIVIL DESIGN ADVANTAGE

WAUKEE, IOWA

SPRINGS AT PRAIRIE CROSSING

EROSION AND SEDIMENT CONTROL PLAN

C6.2

1309.381

FILE: H:\2013\1309381\DWG\1309381-SWPPP.DWG
LAST MODIFIED: 12/16/2013 2:03 PM
PLOTTED BY: DOUG MANDERNACH
COMMENT:
TECH: ENG.

SPRINGS AT PRAIRIE CROSSING

EROSION AND SEDIMENT CONTROL PLAN

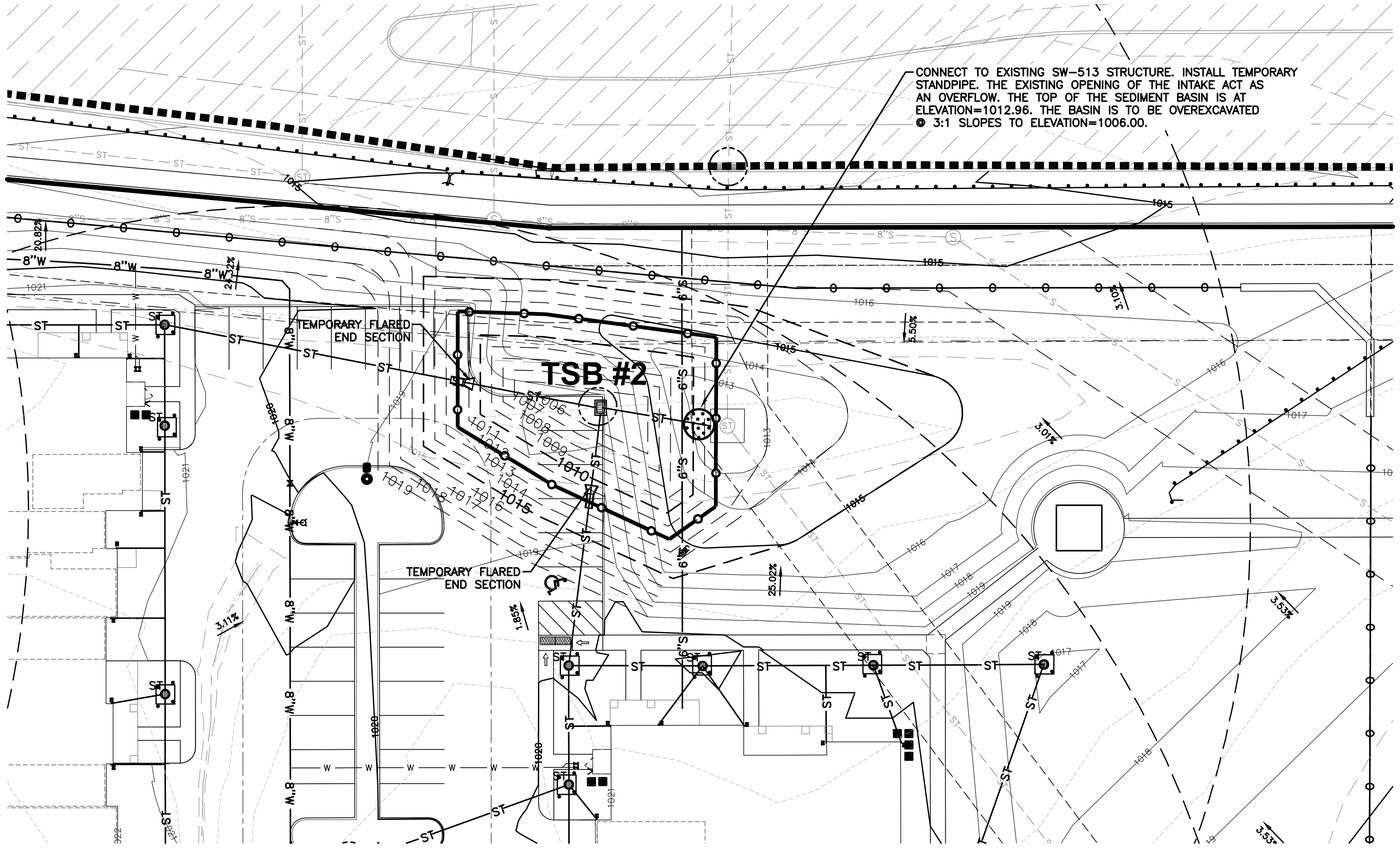

SWPPP LEGEND

DRAINAGE ARROW	X.XX %	AREA TO BE SEEDED	
GRADING LIMITS		STRAW MAT	
FILTER SOCK		UNDISTURBED AREA	
SILT FENCE		RIPRAP	
DITCH CHECK		GRAVEL ENTRANCE	
INLET PROTECTION		STAGING AREA	
PORTABLE RESTROOM	R	TEMPORARY SEDIMENT TRAP	TST #
CONCRETE WASHOUT PIT		TEMPORARY SEDIMENT BASIN	TSB #
TEMPORARY STANDPIPE			

DISCHARGE POINT SUMMARY

DISCHARGE POINT #1 ±3700 FEET TO AN UNNAMED TRIBUTARY TO LITTLE WALNUT CREEK

TOTAL AREA DISTURBED TO DISCHARGE POINT	6.36 ACRES
STORAGE VOLUME REQUIRED (# OF ACRES*3600 CU FT)	22,896 CU FT
VOLUME PROVIDED IN FILTER SOCK (72 LF @ 2.0 CU FT/LF OF SOCK)	144 CU FT
VOLUME PROVIDED IN MISCELLANEOUS SILT FENCE (13,083 SF – CALCULATED)	6,542 CU FT
VOLUME PROVIDED IN TSB#1	99,561 CU FT
TOTAL VOLUME PROVIDED	106,247 CU FT

DISCHARGE POINT #2 ±1925 FEET TO AN UNNAMED TRIBUTARY TO LITTLE WALNUT CREEK

TOTAL AREA DISTURBED TO DISCHARGE POINT	13.63 ACRES
STORAGE VOLUME REQUIRED (# OF ACRES*3600 CU FT)	49,068 CU FT
VOLUME PROVIDED IN SILT FENCE @ 3:1/4:1 (1,397 LF @ 4.5 CU FT/LF OF FENCE)	6,287 CU FT
VOLUME PROVIDED IN MISCELLANEOUS SILT FENCE (68,779 SF – CALCULATED)	34,390 CU FT
VOLUME PROVIDED IN TSB#2	9,004 CU FT
TOTAL VOLUME PROVIDED	49,681 CU FT

TEMPORARY STAND PIPE DETAIL: TSB #2

NOT TO SCALE

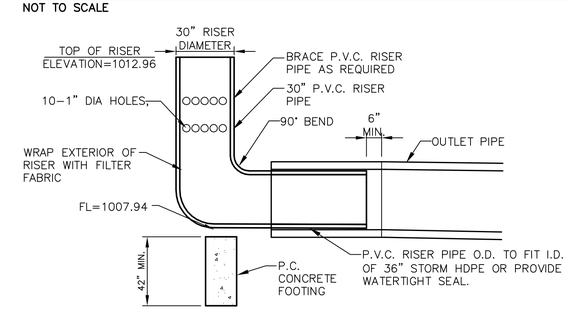

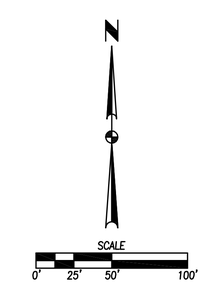

REVISIONS	DATE
CITY COUNCIL SUBMITTAL #3	12-16-13
SITE PLAN SUBMITTAL #3	12-10-13
SITE PLAN SUBMITTAL #2	11-26-13
SITE PLAN SUBMITTAL #1	11-12-13

3405 S.E. CROSSROADS DRIVE, SUITE G
GRIMES, IOWA 50111
PHONE: (515) 369-4400 FAX: (515) 369-4410
ENGINEER: JAT
TECH: DAM
CIVIL DESIGN ADVANTAGE

SPRINGS AT PRAIRIE CROSSING
EROSION AND SEDIMENT CONTROL PLAN
WAUKEE, IOWA

C6.3

1309.381

FILE: H:\2013\1309381\DWG\1309381-SWPPP.DWG
FILE DATE: 12/16/13 DATE PLOTTED: 12/16/2013 2:03 PM
PLOTTED BY: DOUG MANDERNACH
COMMENT:
TECH:
ENG:

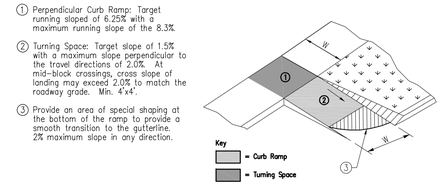

1. Perpendicular Curb Ramp: Target running sloped of 6.25% with a maximum running slope of the 8.3%.
2. Turning Space: Target slope of 1.5% with a maximum slope perpendicular to the travel directions of 2.0%. At mid-block crossings, cross slope of landing may exceed 2.0% to match the roadway grade. Min. 4'x4'.
3. Provide an area of special shaping at the bottom of the ramp to provide a smooth transition to the gutterline. 2% maximum slope in any direction.

6 PERPENDICULAR CURB RAMP @ CLASS "A" INTEGRAL CURB
NOT TO SCALE

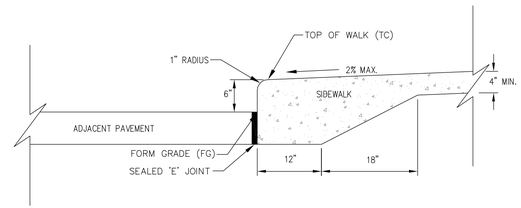

3 CLASS 'A' 6" CURB AND SIDEWALK DETAIL
NOT TO SCALE

If crosswalks are marked, locate ramps, exclusive of flares, within the crosswalk markings.

1. PARALLEL RAMP: IF NORMAL SIDEWALK ELEVATION CANNOT BE ACHIEVED WITH THE PERPENDICULAR RAMP BETWEEN THE STREET AND LANDING DUE TO LIMITED RAMP LENGTH, PROVIDE A PARALLEL RAMP TO MAKE UP THE ELEVATION DIFFERENCE BETWEEN THE LANDING AND THE STANDARD SIDEWALK.

   THE LENGTH OF THE PARALLEL RAMP IS NOT REQUIRED TO EXCEED 15 FEET, REGARDLESS OF THE RESULTING SLOPE. DO NOT EXCEED 8.3% SLOPE FOR PARALLEL RAMPS SHORTER THAN 15 FEET.
2. INSTALL A 24 INCH WIDE (MIN.) STRIP OF DETECTABLE WARNINGS AT THE BACK OF CURB. EXTEND THE DETECTABLE WARNINGS ACROSS THE FULL WIDTH OF THE RAMP.
3. PROVIDE A MINIMUM OF 6 INCHES OF CONCRETE BELOW THE DETECTABLE WARNING PANEL.
4. LANDING: MAXIMUM SLOPE OF 2% IN ANY DIRECTION.

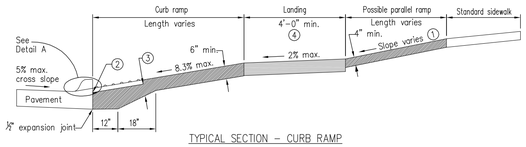

TYPICAL SECTION – CURB RAMP

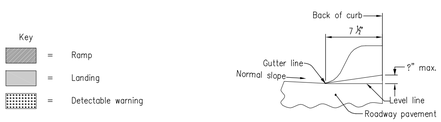

DETAIL A

5 CURB RAMPS GENERAL SECTION AND DETAILS
NOT TO SCALE

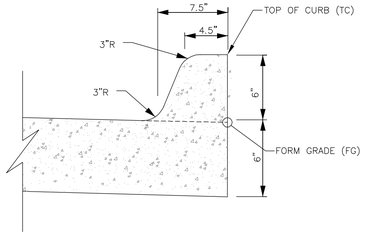

2 INTEGRAL 6" STANDARD CURB
NOT TO SCALE

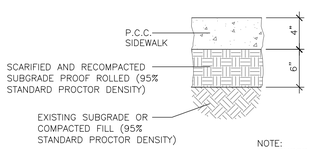

NOTE:
1. SUBGRADE PREPARATION SHALL EXTEND 24" BEYOND EDGE OF PAVING.

4 P.C.C. SIDEWALK
NOT TO SCALE

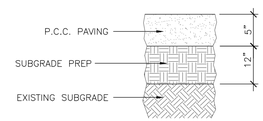

LIGHT DUTY PCC PAVING

NOTE:
1. SUBGRADE PREPARATION SHALL EXTEND 24" BEYOND EDGE OF PAVING OR BACK OF CURB.

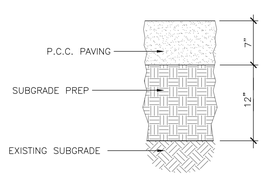

HEAVY DUTY PCC PAVING

NOTE:
1. SUBGRADE PREPARATION SHALL EXTEND 24" BEYOND EDGE OF PAVING OR BACK OF CURB.

1 P.C.C. PAVING
NOT TO SCALE

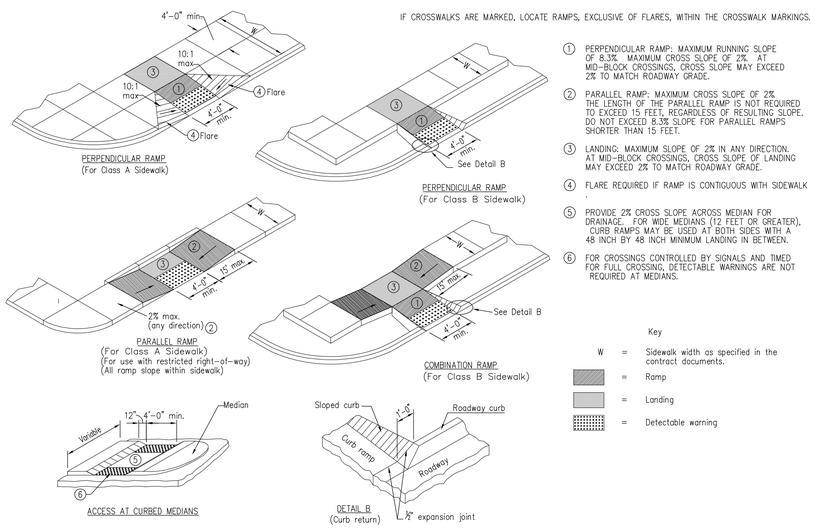

IF CROSSWALKS ARE MARKED, LOCATE RAMPS, EXCLUSIVE OF FLARES, WITHIN THE CROSSWALK MARKINGS.

1. PERPENDICULAR RAMP: MAXIMUM RUNNING SLOPE OF 8.3% MAXIMUM CROSS SLOPE OF 2% AT MID-BLOCK CROSSINGS, CROSS SLOPE MAY EXCEED 2% TO MATCH ROADWAY GRADE.
2. PARALLEL RAMP: MAXIMUM CROSS SLOPE OF 2% THE LENGTH OF THE PARALLEL RAMP IS NOT REQUIRED TO EXCEED 15 FEET, REGARDLESS OF RESULTING SLOPE. DO NOT EXCEED 8.3% SLOPE FOR PARALLEL RAMPS SHORTER THAN 15 FEET.
3. LANDING: MAXIMUM SLOPE OF 2% IN ANY DIRECTION. AT MID-BLOCK CROSSINGS, CROSS SLOPE OF LANDING MAY EXCEED 2% TO MATCH ROADWAY GRADE.
4. FLARE REQUIRED IF RAMP IS CONTIGUOUS WITH SIDEWALK
5. PROVIDE 2% CROSS SLOPE ACROSS MEDIAN FOR DRAINAGE. FOR WIDE MEDIANS (12 FEET OR GREATER), CURB RAMPS MAY BE USED AT BOTH SIDES WITH A 48 INCH BY 48 INCH MINIMUM LANDING IN BETWEEN.
6. FOR CROSSINGS CONTROLLED BY SIGNALS AND TIMED FOR FULL CROSSING, DETECTABLE WARNINGS ARE NOT REQUIRED AT MEDIANS.

Key
W = Sidewalk width as specified in the contract documents.
= Ramp
= Landing
= Detectable warning

7 CURB RAMPS OUTSIDE OF INTERSECTION RADIUS
NOT TO SCALE

DATE	REVISIONS
12-16-13	CITY COUNCIL SUBMITTAL #3
12-10-13	SITE PLAN SUBMITTAL #3
11-26-13	SITE PLAN SUBMITTAL #2
11-12-13	SITE PLAN SUBMITTAL #1

3405 S.E. CROSSROADS DRIVE, SUITE G
GRIMES, IOWA 50111
PHONE: (515) 369-4400 FAX: (515) 369-4410
ENGINEER: JAT | TECH: DAM

CIVIL DESIGN ADVANTAGE

SPRINGS AT PRAIRIE CROSSING

WAUKEE, IOWA

DETAILS

C9.1

1309.381

FILE: H:\2013\1309381\DWG\1309381-COVER DETAILS.DWG
PLOT SCALE: 1:1 PLOT DATE: 12/16/2013 2:12 PM
PLOTTED BY: DOUG MANDERNACH
COMMENT:
TECH: ENG:

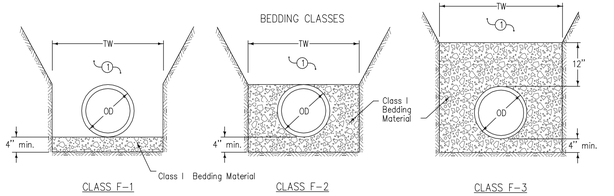

① Place remainder of bedding and backfill materials as specified in the contract documents.

ALLOWABLE BEDDING CLASSES

Pipe Material	Storm Sewer	Sanitary Sewer
Ductile Iron	F-1, F-2, F-3	F-1, F-2, F-3
HDPE	F-2, F-3	Not allowed
PVC	F-2, F-3	F-3

Key

OD = Outside diameter of pipe

TW = Trench width at top of pipe: Min. = OD+18 inches OR 1.25xOD+12 inches (whichever is greater)

ALLOWABLE BURY DEPTH

PVC PIPE

(Bedding Class F-2 or F-3)

Pipe Diameter (inches)	ASTM D 3034			ASTM F 679	ASTM F 949	ASTM F 1803	ASTM D 2680
	Solid Wall			Solid Wall	Corrug. Exterior	Closed Profile	Composite (Truss Type)
	SDR 23.5	SDR 26	SDR 35	SDR 35			
8	30'	28'	24'	---	24'	---	32'
10	30'	28'	24'	---	24'	---	32'
12	30'	28'	24'	---	24'	---	32'
15	30'	28'	24'	---	24'	---	32'
18	---	---	---	24'	24'	---	---
21	---	---	---	24'	24'	24'	---
24	---	---	---	24'	24'	24'	---
27	---	---	---	24'	---	24'	---

DUCTILE IRON, AWWA C151, CLASS 52

(Bedding Class F-1, F-2, or F-3)

Pipe Diameter (inches)	Class F-1 Bedding	Class F-2 Bedding	Class F-3 Bedding
4	40'	40'	40'
6	40'	40'	40'
8	40'	40'	40'
10	40'	40'	40'
12	37'	40'	40'
14	31'	40'	40'
16	28'	37'	40'
18	25'	34'	40'

HDPE PIPE

(Bedding Class F-2 or F-3)

Pipe Diameter (inches)	AASHTO M 294
12	8'
15	9'
18	9'
24	9'
30	9'

7 SW-103 FLEXIBLE PIPE TRENCH BEDDING

NOT TO SCALE

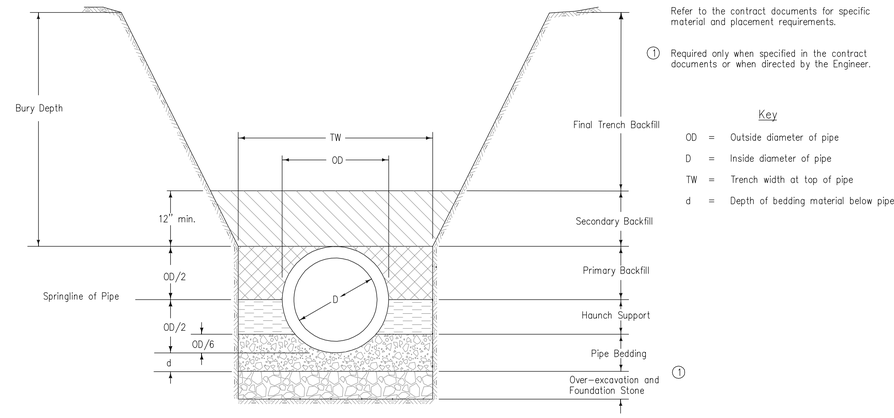

Refer to the contract documents for specific material and placement requirements.

① Required only when specified in the contract documents or when directed by the Engineer.

Key

OD = Outside diameter of pipe

D = Inside diameter of pipe

TW = Trench width at top of pipe

d = Depth of bedding material below pipe

4 SW-101 TRENCH BEDDING AND BACKFILL ZONES

NOT TO SCALE

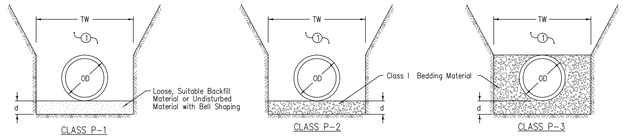

ALLOWABLE BURY DEPTH

DUCTILE IRON, AWWA C151, CLASS 52

Pipe Diameter (inches)	Class P-1 Bedding	Class P-2 Bedding	Class P-3 Bedding
4	40'	40'	40'
6	40'	40'	40'
8	40'	40'	40'
10	36'	40'	40'
12	31'	40'	40'
14	26'	40'	40'
16	23'	37'	40'
18	20'	34'	40'

PVC, AWWA C900 & C905, DR18

Pipe Diameter (inches)	Class P-1 Bedding	Class P-2 Bedding	Class P-3 Bedding
4	19'	23'	40'
6	19'	23'	40'
8	19'	23'	40'
10	19'	23'	40'
12	19'	23'	40'
14	19'	23'	40'
16	19'	23'	40'
18	19'	23'	40'

① Place remainder of bedding and backfill material as specified in the contract documents.

Key

OD = Outside diameter of pipe

TW = Trench width at top of pipe: Min. = OD+18 inches OR 1.25xOD+12 inches (whichever is greater)

d = Depth of bedding material below pipe: Min. = OD/8 OR 4 inches (whichever is greater)

6 SW-104 PRESSURE PIPE TRENCH BEDDING

NOT TO SCALE

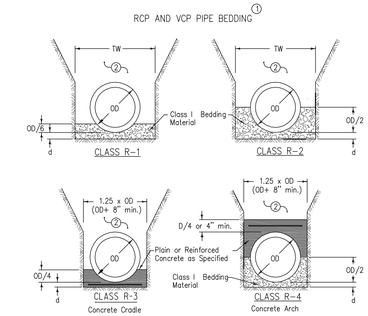

Refer to sheet 2 for bury depth restrictions.

① Use Bedding Class R-1 or R-2 unless specified otherwise.

② Place remainder of bedding and backfill materials as specified in the contract documents.

Key

OD = Outside diameter of pipe

OS = Outside span of pipe

TW = Trench width at top of pipe: Min. = OD+18 inches Max.= 1.25xOD+12 inches OR 54 inches (whichever is greater)

d = Depth of bedding material below pipe: OD/8 or OS/8, OR 4 inches (whichever is greater)

CLASS III RCP

Pipe Diameter (inches)	Class R-1 Bedding	Class R-2 Bedding	Class R-3 & R-4 Bedding		
			No Steel	As=0.4%	As=1.0%
12	7'	10'	15'	19'	27'
15	8'	10'	16'	19'	27'
18	8'	1 1'	16'	20'	40'
21	8'	1 1'	18'	26'	40'
24	8'	12'	23'	36'	40'
27	10'	15'	30'	40'	40'
30	1 1'	15'	29'	40'	40'
33	1 1'	15'	28'	40'	40'
36	1 1'	15'	27'	40'	40'
42	1 1'	15'	26'	38'	40'
48	1 1'	15'	26'	36'	40'

As = Area of Steel Reinforcing

3 SW-102 RIGID GRAVITY PIPE TRENCH BEDDING

NOT TO SCALE

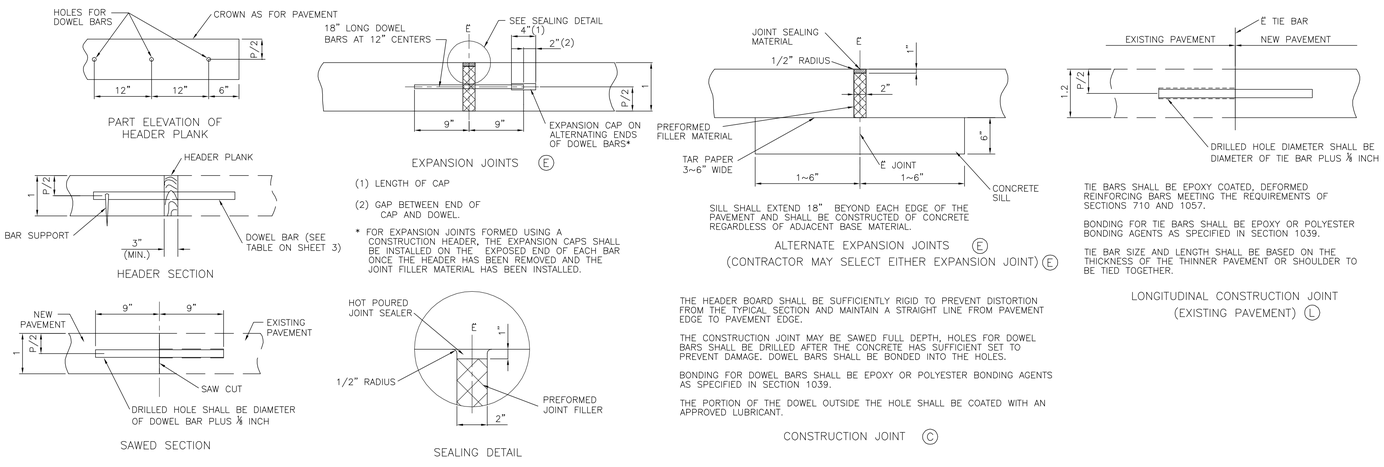

5 PAVING JOINTS

NOT TO SCALE

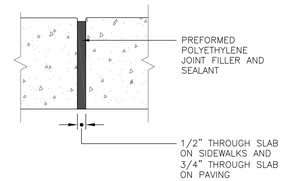

NOTE:
ALL PREFORMED JOINT MATERIAL SHALL BE INSTALLED PERPENDICULAR TO THE PAVEMENT SURFACE AND CARE SHALL BE EXERCISED THROUGHOUT THE CONSTRUCTION OF THE PAVEMENT TO ENSURE THAT SUCH JOINT MATERIAL REMAINS IN PROPER POSITION UPON COMPLETION OF PAVING OPERATION.

2 P.C.C. PAVING AND SIDEWALK ISOLATION JOINT

NOT TO SCALE

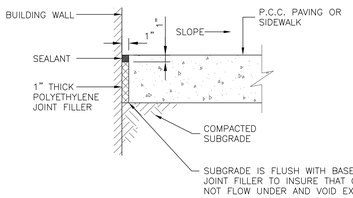

1 ISOLATION JOINT IN PAVING AT BUILDING INTERFACE

NOT TO SCALE

3405 S.E. CROSSROADS DRIVE, SUITE G
GRIMES, IOWA 50111
PHONE: (515) 369-4400 FAX: (515) 369-4410
ENGINEER: JAT | TECH: DAM

REVISIONS	DATE
CITY COUNCIL SUBMITTAL #3	12-16-13
SITE PLAN SUBMITTAL #3	12-10-13
SITE PLAN SUBMITTAL #2	11-26-13
SITE PLAN SUBMITTAL #1	11-12-13

CIVIL DESIGN ADVANTAGE

WAUKEE, IOWA

SPRINGS AT PRAIRIE CROSSING

DETAILS

C9.2

1309.381

FILE: I:\2013\1309381\LDWG\1309381-COVER DETAILS.DWG
PLOT DATE: 12/16/2013 2:12 PM
PLOTTED BY: DOUG MANDERNACH
COMMENT:
TECH: ENG

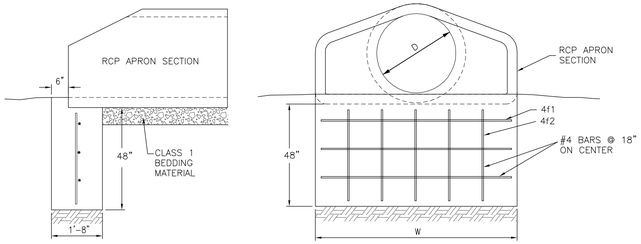

TYPICAL SECTION

ELEVATION

REINFORCING BAR LIST

D	W	Mark	Size	Length	Count
12"	2'-4"	4f1	4	2'-0"	3
		4f2	4	3'-8"	2
15"	2'-10"	4f1	4	2'-6"	3
		4f2	4	3'-8"	2
18"	3'-5"	4f1	4	3'-1"	3
		4f2	4	3'-8"	3
24"	4'-6"	4f1	4	4'-2"	3
		4f2	4	3'-8"	3
30"	5'-7"	4f1	4	5'-3"	3
		4f2	4	3'-8"	4
36"	6'-8"	4f1	4	6'-4"	3
		4f2	4	3'-8"	5
42"	7'-3"	4f1	4	6'-11"	3
		4f2	4	3'-8"	5
48"	7'-10"	4f1	4	7'-6"	3
		4f2	4	3'-8"	6
54"	8'-5"	4f1	4	8'-1"	3
		4f2	4	3'-8"	6
60"	8'-11"	4f1	4	8'-7"	3
		4f2	4	3'-8"	6
66"	8'-11"	4f1	4	8'-7"	3
		4f2	4	3'-8"	6
72"	10'-0"	4f1	4	9'-8"	3
		4f2	4	3'-8"	7
78"	10'-7"	4f1	4	10'-3"	3
		4f2	4	3'-8"	7
84"	11'-1"	4f1	4	10'-9"	3
		4f2	4	3'-8"	8

5 RCP APRON SECTION FOOTING
NOT TO SCALE

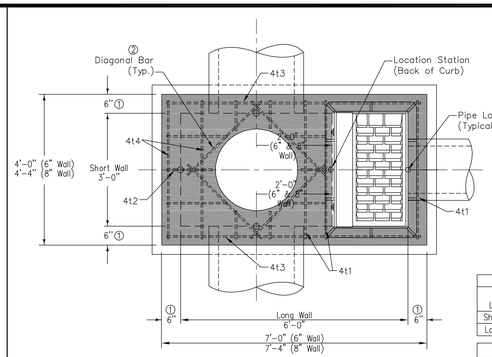

PLAN

MAXIMUM PIPE DIAMETERS		
Pipe Location	Precast Structure	Cast-in-place Structure
Short Wall	18"	30"
Long Wall	30"	36"

① Use 8" wall option for intake depths greater than 7'-0" and less than 10'-0".

② Install four #4 diagonal bars at manhole opening and at all pipe openings.

③ Cast-in-place base shown. If base is precast integral with walls, the footprint of the base is not required to extend beyond the outer edge of the walls.

④ 12 inch minimum wall height above all pipes.

REINFORCING BAR LIST

Mark	Size	Location	Shape	Count		Length		Spacing	
				6" Wall	8" Wall	6" Wall	8" Wall	6" Wall	8" Wall
4t1	4	Top	——	6	6	3'-8"	4'-0"	See Detail	See Detail
4t2	4	Top	——	6	6	4'-2"	4'-4"	10 ½"	11"
4t3	4	Top	——	4	4	6'-8"	7'-0"	See Detail	See Detail
4t4	4	Top	——	8	8	3'-8"	4'-0"	11"	11 ½"
4b1	4	Base	——	8	8	4'-2"	4'-6"	12 ¾"	12 ¾"
4b2	4	Base	——	6	6	7'-2"	7'-6"	10"	10 ¾"
4w1	4	Short Walls	——	Varies	Varies	3'-8"	4'-0"	12"	12"
4w2	4	Long Walls	——	Varies	Varies	6'-8"	7'-0"	12"	12"
4w3	4	Walls	——	22	22	Wall Height minus 4"		11"	11"

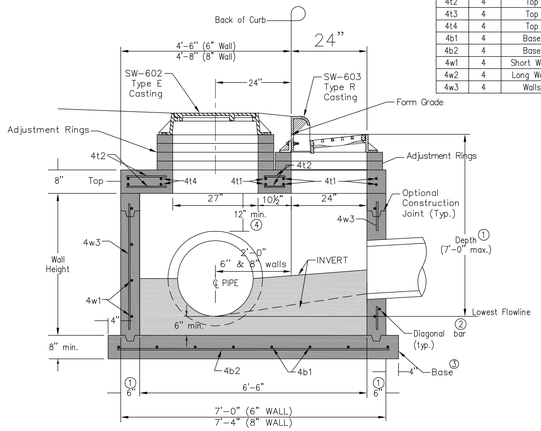

TYPICAL SECTION

3 SW-503 SINGLE GRATE INTAKE WITH MANHOLE
NOT TO SCALE

REFER TO SW-514 FOR BOXOUT DETAILS

① INSTALL FOUR #4 DIAGONAL BARS AT ALL PIPE OPENINGS.

② SW-603 TYPE R UNLESS TYPE Q IS SPECIFIED IN THE CONTRACT DOCUMENTS.

③ CAST-IN-PLACE BASE SHOWN. IF BASE IS PRECAST INTEGRAL WITH WALLS, THE FOOTPRINT OF THE BASE IS NOT REQUIRED TO EXTEND BEYOND THE OUTER EDGE OF THE WALLS.

④ 12 INCH MINIMUM WALL HEIGHT ABOVE ALL PIPES.

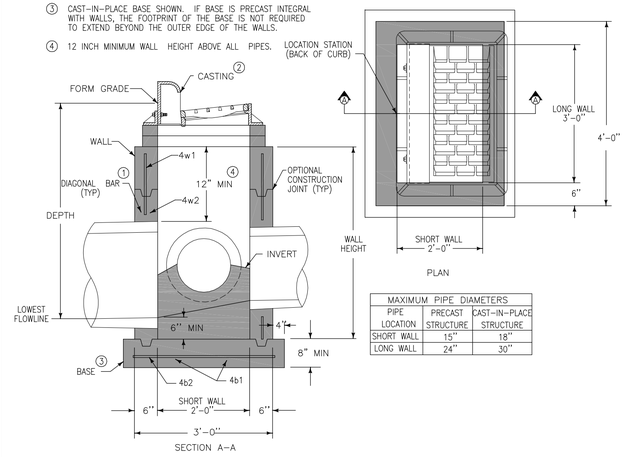

MAXIMUM PIPE DIAMETERS		
PIPE LOCATION	PRECAST STRUCTURE	CAST-IN-PLACE STRUCTURE
SHORT WALL	15"	18"
LONG WALL	24"	30"

REINFORCING BAR LIST

MARK	SIZE	LOCATION	SHAPE	LENGTH	COUNT	SPACING
4w1	4	WALLS	——	WALL HEIGHT MINUS 4"	14	12"
4w2	4	LONG WALLS	——	3'-8"	VARIES	12"
4w3	4	SHORT WALLS	——	2'-8"	VARIES	12"
4b1	4	BASE	——	4'-2"	4	10"
4b2	4	BASE	——	3'-2"	5	10"

2 SW-501 SINGLE GRATE INTAKE
NOT TO SCALE

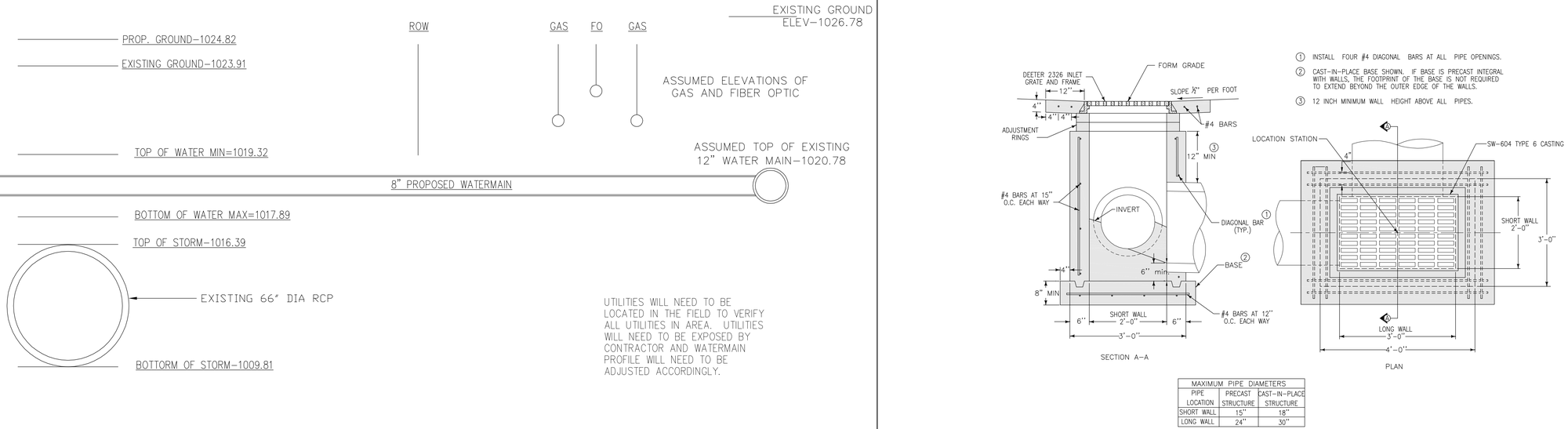

4 WATERMAIN TIE IN AT ALICE'S ROAD DETAIL
NOT TO SCALE

MAXIMUM PIPE DIAMETERS		
PIPE LOCATION	PRECAST STRUCTURE	CAST-IN-PLACE STRUCTURE
SHORT WALL	15"	18"
LONG WALL	24"	30"

1 SW-511 RECTANGULAR AREA INTAKE
NOT TO SCALE

REVISIONS	DATE
CITY COUNCIL SUBMITTAL #3	12-16-13
SITE PLAN SUBMITTAL #3	12-10-13
SITE PLAN SUBMITTAL #2	11-26-13
SITE PLAN SUBMITTAL #1	11-12-13

3405 S.E. CROSSROADS DRIVE, SUITE G
GRIMES, IOWA 50111
PHONE: (515) 369-4400 FAX: (515) 369-4410
ENGINEER: JAT | TECH: DAM

CIVIL DESIGN ADVANTAGE

SPRINGS AT PRAIRIE CROSSING
DETAILS
WAUKEE, IOWA

C9.3

1309.381

FILE: I:\2013\1309381\LDWK\1309381-COVER DETAILS.DWG
PLOT DATE: 12/16/2013 2:12 PM
PLOTTED BY: DOUG MANDERNACH
COMMENT:
TECH:
ENG:

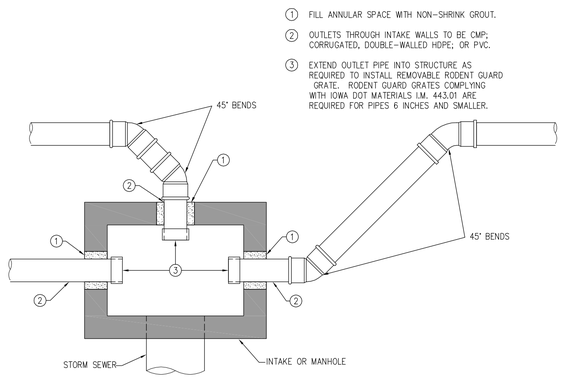

PLAN VIEW

① FILL ANNULAR SPACE WITH NON-SHRINK GROUT.

② OUTLETS THROUGH INTAKE WALLS TO BE CMP; CORRUGATED, DOUBLE-WALLED HDPE; OR PVC.

③ EXTEND OUTLET PIPE INTO STRUCTURE AS REQUIRED TO INSTALL REMOVABLE RODENT GUARD GRATE. RODENT GUARD GRATES COMPLYING WITH IOWA DOT MATERIALS I.M. 443.01 ARE REQUIRED FOR PIPES 6 INCHES AND SMALLER.

5 SUBDRAIN CONNECTION TO INTAKE
NOT TO SCALE

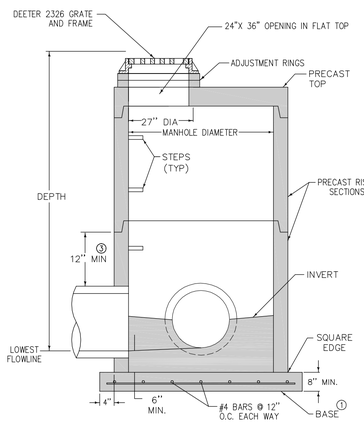

TYPICAL SECTION

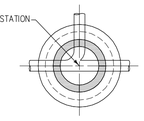

PLAN

① CAST-IN-PLACE BASE SHOWN. IF BASE IS PRECAST INTEGRAL WITH BOTTOM RISER, THE FOOTPRINT OF THE BASE IS NOT REQUIRED TO EXTEND BEYOND THE OUTER EDGE OF THE RISER.

② FOR ADDITIONAL CONFIGURATIONS, MAINTAIN A MINIMUM OF 12 INCHES OF CONCRETE BETWEEN VERTICAL EDGES OF PIPE OPENINGS.

③ 12 INCH MINIMUM RISER HEIGHT ABOVE ALL PIPE OPENINGS.

MANHOLE DIAMETER (INCHES)	MAXIMUM PIPE DIAMETER ② (INCHES) FOR 2 PIPES	
	AT 180° SEPARATION	AT 90° SEPARATION
48	24	18
60	36	24
72	42	30
84	48	36
96	60	42

3 SW-502 CIRCULAR STORM SEWER INTAKE
NOT TO SCALE

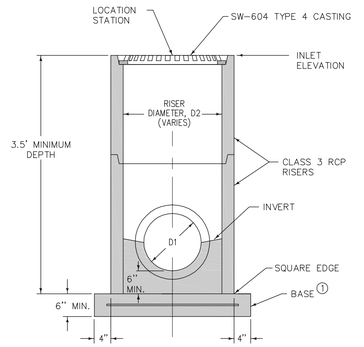

TYPICAL SECTION

① PRECAST (SHOWN) OR CAST-IN-PLACE BASE:

PRECAST: 6-INCH THICK CONCRETE WITH #6 WELDED WIRE MESH ON 4-INCH CENTERS (WWF 4" X 4").

CAST-IN-PLACE: 8-INCH THICK NON-REINFORCED CONCRETE.

② 12-INCH MINIMUM RISER HEIGHT ABOVE ALL PIPES.

INTAKE SIZE - CASE 1	
OUTLET PIPE DIAMETER, D1	MINIMUM RISER DIAMETER, D2
12"	18"
15"	24"
18"	24"
21"	30"
24"	30"
27"	36"

2 SW-512 CIRCULAR AREA INTAKE
NOT TO SCALE

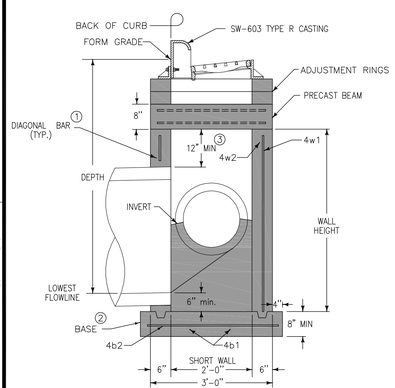

SECTION A-A

REFER TO SW-514 FOR BOXOUT DETAILS.

① INSTALL FOUR #4 DIAGONAL BARS AT ALL PIPE OPENINGS.

② CAST-IN-PLACE BASE SHOWN. IF BASE IS PRECAST INTEGRAL WITH WALLS, THE FOOTPRINT OF THE BASE IS NOT REQUIRED TO EXTEND BEYOND THE OUTER EDGE OF THE WALLS.

③ 12 INCH MINIMUM WALL HEIGHT ABOVE ALL PIPES.

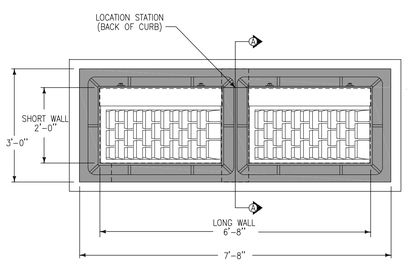

PLAN

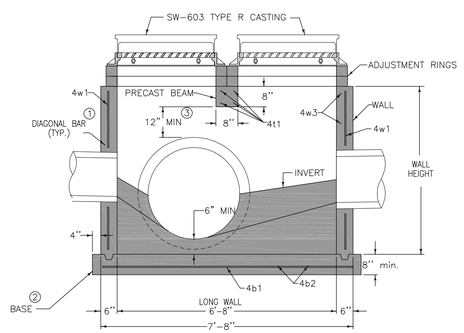

TYPICAL SECTION

① INSTALL FOUR #4 DIAGONAL BARS AT ALL PIPE OPENINGS.

② CAST-IN-PLACE BASE SHOWN. IF BASE IS PRECAST INTEGRAL WITH WALLS, THE FOOTPRINT OF THE BASE IS NOT REQUIRED TO EXTEND BEYOND THE OUTER EDGE OF THE WALLS.

③ 12 INCH MINIMUM WALL HEIGHT ABOVE ALL PIPES.

REINFORCING BAR LIST						
MARK	SIZE	LOCATION	SHAPE	COUNT	LENGTH	SPACING
4t1	4	BEAM	——	4	2'-8"	4"
4b1	4	BASE	——	4	7'-10"	10"
4b2	4	BASE	——	8	3'-2"	12"
4w1	4	WALLS	——	20	WALL HEIGHT MINUS 4"	12"
4w2	4	LONG WALLS	——	VARIES	7'-4"	12"
4w3	4	SHORT WALLS	——	VARIES	2'-8"	12"

MAXIMUM PIPE DIAMETERS		
PIPE LOCATION	PRECAST STRUCTURE	CAST-IN-PLACE STRUCTURE
SHORT WALL	15"	18"
LONG WALL	60"	66"

4 SW-505 DOUBLE GRATE INTAKE
NOT TO SCALE

3405 S.E. CROSSROADS DRIVE, SUITE G
GRIMES, IOWA 50111
PHONE: (515) 369-4400 FAX: (515) 369-4410
ENGINEER: JAT | TECH: DAM

REVISIONS	DATE
CITY COUNCIL SUBMITTAL #3	12-16-13
SITE PLAN SUBMITTAL #3	12-10-13
SITE PLAN SUBMITTAL #2	11-26-13
SITE PLAN SUBMITTAL #1	11-12-13

CIVIL DESIGN ADVANTAGE

WAUKEE, IOWA

SPRINGS AT PRAIRIE CROSSING

DETAILS

C9.4

1309.381

FILE: H:\2013\1309381\DWG\1309381-COVER DETAILS.DWG
PLOT DATE: 12/16/2013 2:13 PM
PLOTTED BY: DOUG MANDERNACH
COMMENT:
TECH: ENG:

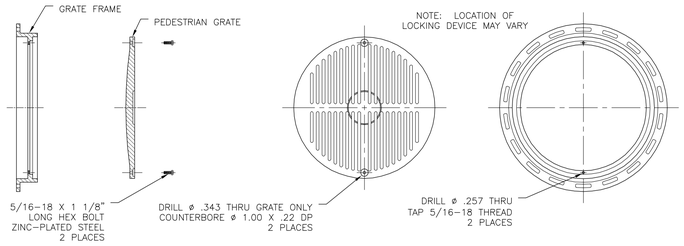

2 PEDESTRIAN GRATE
NOT TO SCALE

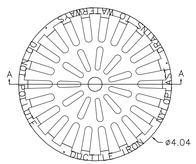

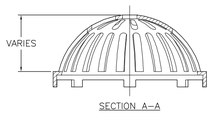

DIMENSIONS ARE FOR REFERENCE ONLY
ACTUAL DIMENSIONS MAY VARY
DIMENSIONS ARE IN INCHES
QUALITY: MATERIALS SHALL CONFORM TO ASTM A536 GRADE 70–50–05
PAINT: CASTINGS ARE FURNISHED WITH A BLACK PAINT
LOCKING DEVICE AVAILABLE UPON REQUEST

6 DOME GRATE
NOT TO SCALE

1. HEAVY DUTY CASTING. MARK LID WITH "STORM" OR "STORM C.O."
2. DO NOT ALLOW CASTING TO BEAR ON TOP OF RISER PIPE; PROVIDE 2 INCH CLEARANCE, MINIMUM.
3. 24 INCH DIAMETER RCP FOR SUBDRAIN 8 INCHES OR SMALLER; 30 INCH DIAMETER RCP FOR 10 TO 12 INCH SUBDRAIN. A MANUFACTURED CLEANOUT MAY BE USED IN LIEU OF A TYPE B CLEANOUT, IF APPROVED BY THE ENGINEER.
4. DESIGN IS INTENDED FOR USE IN CONJUNCTION WITH 8 INCH PVC RISER PIPE. OTHER SIZED CAPS MAY BE USED WITH SMALLER PIPE, AS APPROVED BY THE ENGINEER.
5. PROVIDE TYPE G CASTING, AS REQUIRED TO FIT PIPE SIZE.

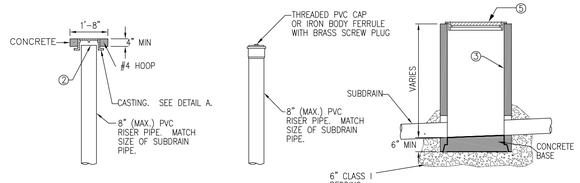

TYPE A–1 CLEANOUT
TYPE A–2 CLEANOUT (NON–TRAFFIC AREAS ONLY)
TYPE B CLEANOUT (NON–TRAFFIC AREAS ONLY)

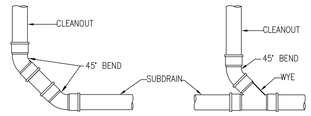

TYPE A CLEANOUT CONNECTIONS

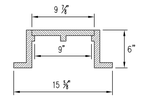

DETAIL A ①④
(DIMENSIONS ARE NOMINAL)

4 SUBDRAIN CLEANOUTS
NOT TO SCALE

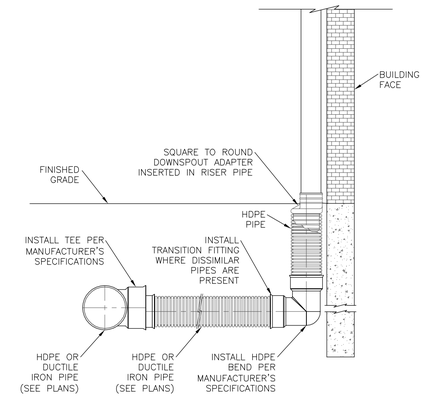

2 ROOF DRAIN CONNECTION WITH TEE
NOT TO SCALE

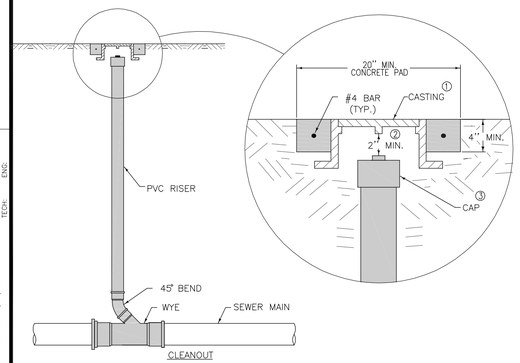

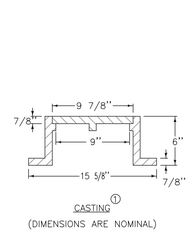

① STANDARD DUTY CASTING COMPLYING WITH AASHTO M 306. MARK LID WITH "SANITARY" OR "SANITARY C.O."
② DO NOT ALLOW CASTING TO BEAR ON TOP OF RISER PIPE.
③ THREADED PVC CAP OR IRON BODY FERRULE WITH BRASS SCREW PLUG

5 SW-203 SANITARY CLEANOUT
NOT TO SCALE

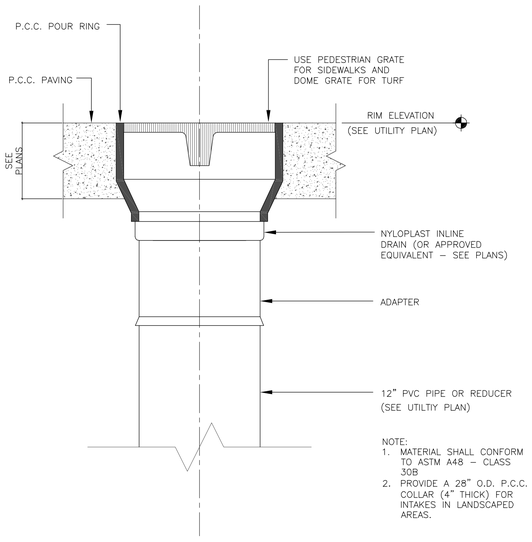

NOTE:
1. MATERIAL SHALL CONFORM TO ASTM A48 – CLASS 30B
2. PROVIDE A 28" O.D. P.C.C. COLLAR (4" THICK) FOR INTAKES IN LANDSCAPED AREAS.

3 NYLOPLAST INLINE DRAIN
NOT TO SCALE

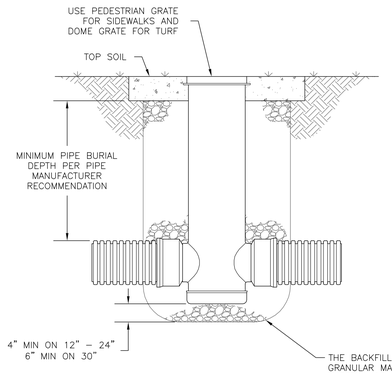

1. GRATES/SOLID COVERS SHALL MEET H–20 LOAD RATING FOR 30" PEDESTRIAN & 12" – 30" STANDARD & SOLID

1 NYLOPLAST INLINE DRAIN BASIN
NOT TO SCALE

REVISIONS	DATE
CITY COUNCIL SUBMITTAL #3	12-16-13
SITE PLAN SUBMITTAL #3	12-10-13
SITE PLAN SUBMITTAL #2	11-26-13
SITE PLAN SUBMITTAL #1	11-12-13

3405 S.E. CROSSROADS DRIVE, SUITE G
GRIMES, IOWA 50111
PHONE: (515) 369-4400 FAX: (515) 369-4410
ENGINEER: JAT | TECH: DAM

CIVIL DESIGN ADVANTAGE

SPRINGS AT PRAIRIE CROSSING

WAUKEE, IOWA

DETAILS

C9.5

1309.381

FILE: H:\2013\1309381\DWG\1309381-COVER DETAILS.DWG
LAST SAVED: 12/17/2013 2:13 PM
PLOTTED BY: DOUG MANDERNACH
COMMENT:
TECH: ENG

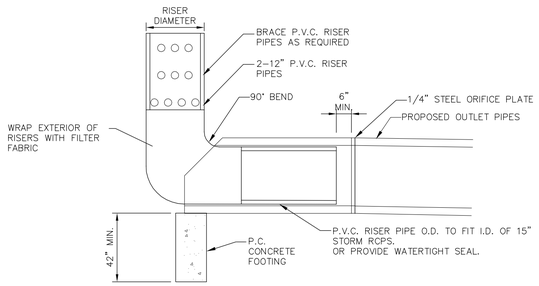

5 TEMPORARY STANDPIPES
NOT TO SCALE

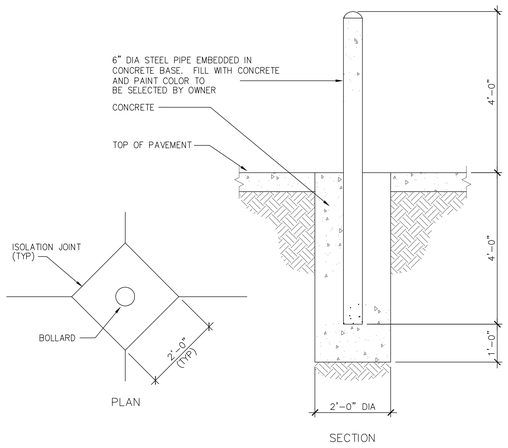

NOTE: SEE ARCHITECTURAL PLANS FOR BOLLARD LOCATIONS AND SIZES

3 BOLLARD
NOT TO SCALE

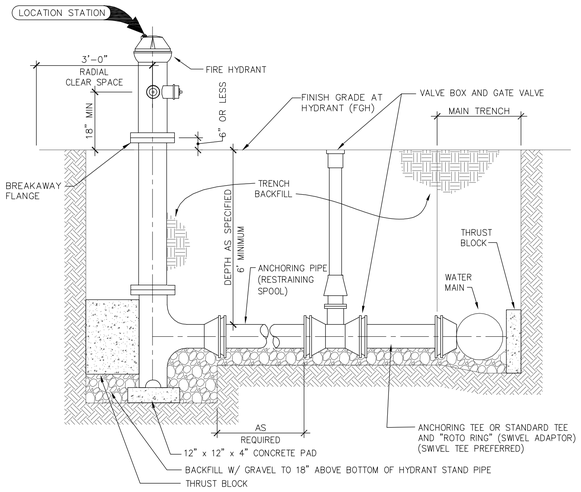

NOTE:
1. ALL HYDRANTS ARE TO HAVE STORZ FITTINGS

2 HYDRANT ASSEMBLY SPOT ELEVATION REFERENCE
NOT TO SCALE

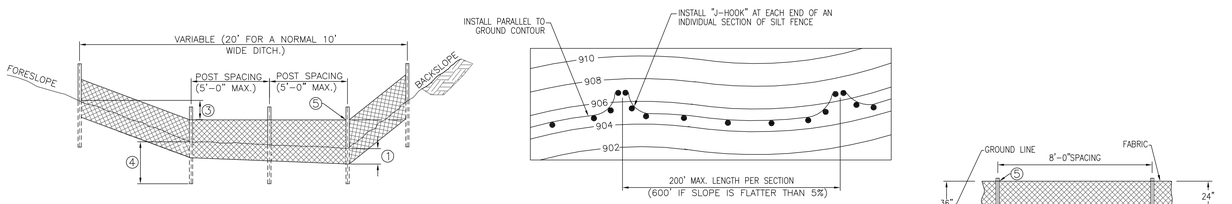

GENERAL NOTES:
INSTALL SILT FENCE ACCORDING TO THE REQUIREMENTS OF THE PROJECT SPECIFICATIONS AND AT LOCATIONS SHOWN IN THE CONTRACT DOCUMENTS OR AS DIRECTED BY THE JURISDICTIONAL ENGINEER.

1. INSERT 12 IN. OF FABRIC A MINIMUM OF 6 IN. DEEP (FABRIC MAY BE FOLDED BELOW THE GROUND LINE)
2. COMPACT GROUND BY DRIVING ALONG EACH SIDE OF THE SILT FENCE AS REQUIRED TO SUFFICIENTLY SECURE THE FABRIC IN THE TRENCH TO PREVENT PULLOUT AND FLOW UNDER THE FENCE.
3. IN DITCHES, EXTEND SILT FENCE UP SIDE SLOPE SO THE BOTTOM ELEVATION AT THE END OF THE FENCE IS A MINIMUM OF 2 IN. HIGHER THAN THE TOP OF THE FENCE IN THE LOW POINT OF THE DITCH.
4. STEEL POSTS TO BE EMBEDDED 20 IN. UNLESS OTHERWISE ALLOWED BY THE JURISDICTIONAL ENGINEER.
5. SECURE TOP OF ENGINEERING FABRIC TO STEEL POSTS USING WIRE OR PLASTIC TIES (50 LB. MIN.). SEE DETAILS OF "ATTACHMENT TO POSTS."

4 SILT FENCE
NOT TO SCALE

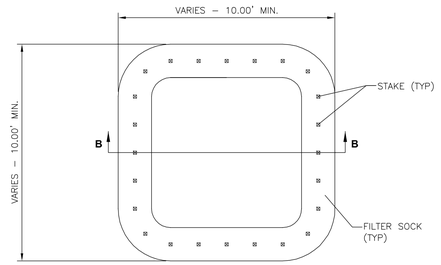

PLAN-TEMPORARY CONCRETE WASHOUT
ABOVE GRADE- N.T.S.

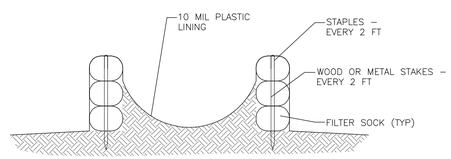

SECTION B-B
N.T.S.

NOTES:
1. ACTUAL LAYOUT AND LOCATION TO BE DETERMINED IN FIELD BY THE CONTRACTOR.
2. THE CONCRETE WASHOUT SIGN SHALL BE INSTALLED WITHIN 30' OF THE TEMPORARY CONCRETE WASHOUT FACILITY.
3. TEMPORARY WASHOUT AREA MUST BE AT LEAST 50' FROM A STORM DRAIN, CREEK BANK OR PERIMETER CONTROL.
4. CLEAN OUT CONCRETE WASHOUT AREA WHEN 75% FULL.
5. THE CONCRETE WASHOUT SHALL BE LOCATED OUTSIDE OF PUBLIC RIGHT OF WAY.

1 CONCRETE WASHOUT
NOT TO SCALE

REVISIONS	DATE
CITY COUNCIL SUBMITTAL #3	12-16-13
SITE PLAN SUBMITTAL #3	12-10-13
SITE PLAN SUBMITTAL #2	11-26-13
SITE PLAN SUBMITTAL #1	11-12-13

3405 S.E. CROSSROADS DRIVE, SUITE G
GRIMES, IOWA 50111
PHONE: (515) 369-4400 FAX: (515) 369-4410
ENGINEER: JAT | TECH: DAM

CIVIL DESIGN ADVANTAGE

WAUKEE, IOWA

SPRINGS AT PRAIRIE CROSSING
DETAILS

C9.6

1309.381

FILE: H:\2013\1309381\DWG\1309381-COVER DETAILS.DWG
XREF: 1309381-SITE PLOTTED: 12/16/2013 2:13 PM
PLOTTED BY: DOUG MANDERNACH
COMMENT:
TECH: ENG:

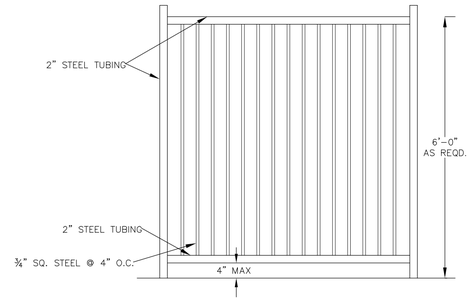

3 6' POOL FENCE
NOT TO SCALE

2 4' PERMIMETER FENCE
NOT TO SCALE

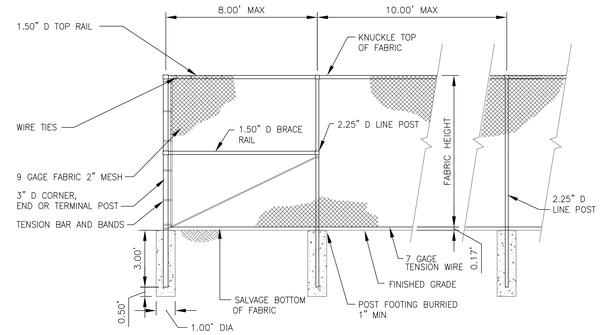

NOTES: 1. ALL POLYVINYL CHLORIDE (PVC) COATED FENCE MATERIALS (FRAMEWORK, FENCE FABRIC, FITTINGS, TENSION WIRES, ETC.) SHALL BE BLACK.

1 CHAINLINK FENCING
NOT TO SCALE

REVISIONS	DATE
CITY COUNCIL SUBMITTAL #3	12-16-13
SITE PLAN SUBMITTAL #3	12-10-13
SITE PLAN SUBMITTAL #2	11-26-13
SITE PLAN SUBMITTAL #1	11-12-13

3405 S.E. CROSSROADS DRIVE, SUITE G
GRIMES, IOWA 50111
PHONE: (515) 369-4400 FAX: (515) 369-4410
ENGINEER: JAT | TECH: DAM

CIVIL DESIGN ADVANTAGE

SPRINGS AT PRAIRIE CROSSING

WAUKEE, IOWA

DETAILS

C9.7

1309.381

FILE: N:\2013\1309381\DWG\1309381-COVER DETAILS.DWG
PLOT DATE: 12/17/2013 2:13 PM COMMENT:
PLOTTED BY: DOUG VANDERNACH TECH: ENG

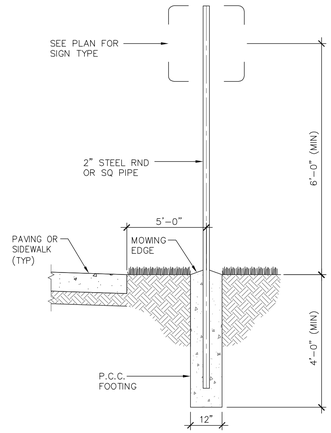

2 TYPICAL SIGN POST
NOT TO SCALE

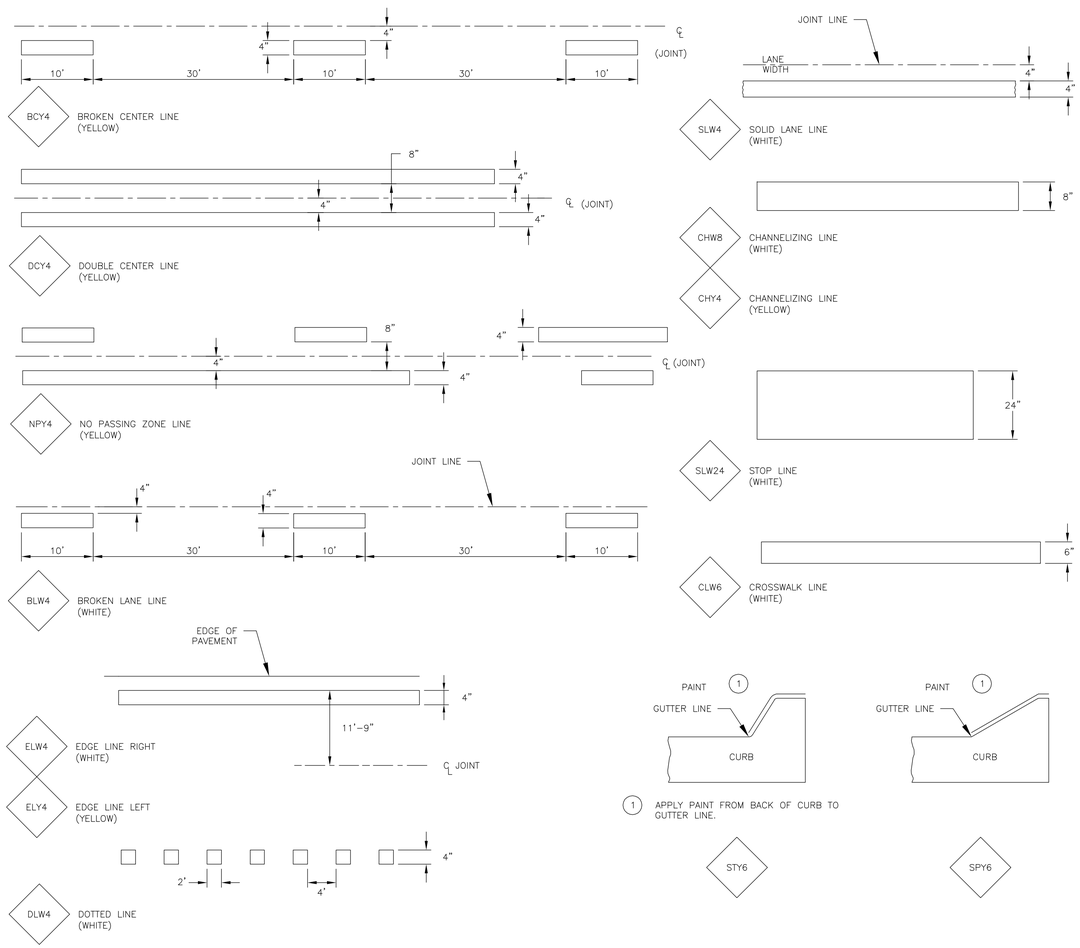

4 STANDARD TYPES OF PAVEMENT MARKINGS
NOT TO SCALE

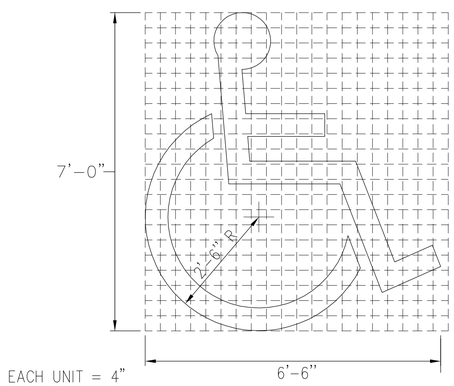

1 WHEELCHAIR SYMBOL DETAIL
NOT TO SCALE

REVISIONS	DATE
CITY COUNCIL SUBMITTAL #3	12-16-13
SITE PLAN SUBMITTAL #3	12-10-13
SITE PLAN SUBMITTAL #2	11-26-13
SITE PLAN SUBMITTAL #1	11-12-13

3405 S.E. CROSSROADS DRIVE, SUITE G
GRIMES, IOWA 50111
PHONE: (515) 369-4400 FAX: (515) 369-4410
ENGINEER: JAT | TECH: DAM

CIVIL DESIGN ADVANTAGE
WAUKEE, IOWA

SPRINGS AT PRAIRIE CROSSING

DETAILS

C9.8

1309.381

FILE: H:\2013\1309381\LDWG\1309381-COVER DETAILS.DWG
PLOT DATE: 12/16/2013 2:14 PM COMMENT:
PLOTTED BY: DOUG MANDERNACH TECH:

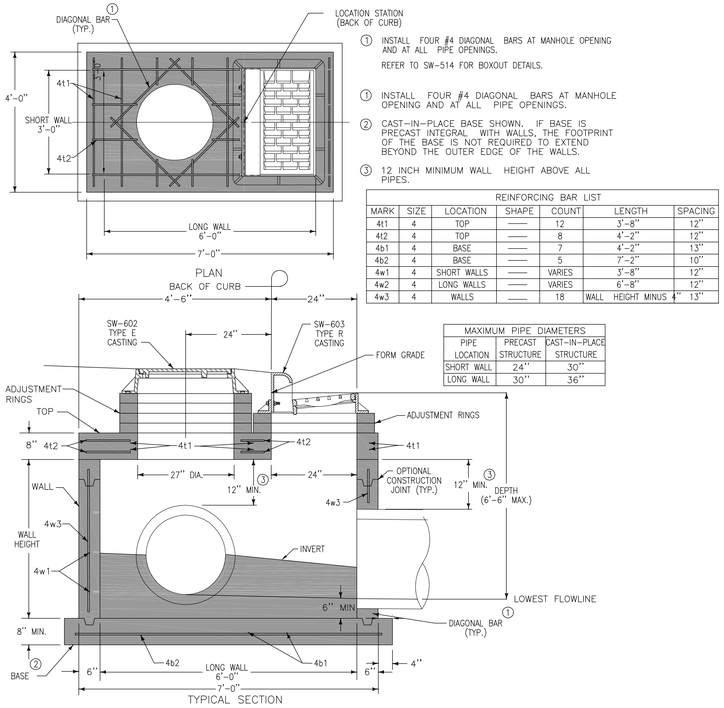

① INSTALL FOUR #4 DIAGONAL BARS AT MANHOLE OPENING AND AT ALL PIPE OPENINGS.

REFER TO SW-514 FOR BOXOUT DETAILS.

① INSTALL FOUR #4 DIAGONAL BARS AT MANHOLE OPENING AND AT ALL PIPE OPENINGS.

② CAST-IN-PLACE BASE SHOWN. IF BASE IS PRECAST INTEGRAL WITH WALLS, THE FOOTPRINT OF THE BASE IS NOT REQUIRED TO EXTEND BEYOND THE OUTER EDGE OF THE WALLS.

③ 12 INCH MINIMUM WALL HEIGHT ABOVE ALL PIPES.

REINFORCING BAR LIST						
MARK	SIZE	LOCATION	SHAPE	COUNT	LENGTH	SPACING
4t1	4	TOP	——	12	3'-8"	12"
4t2	4	TOP	——	8	4'-2"	12"
4b1	4	BASE	——	7	4'-2"	13"
4b2	4	BASE	——	5	7'-2"	10"
4w1	4	SHORT WALLS	——	VARIES	3'-8"	12"
4w2	4	LONG WALLS	——	VARIES	6'-8"	12"
4w3	4	WALLS	——	18	WALL HEIGHT MINUS 4"	13"

MAXIMUM PIPE DIAMETERS		
PIPE LOCATION	PRECAST STRUCTURE	CAST-IN-PLACE STRUCTURE
SHORT WALL	24"	30"
LONG WALL	30"	36"

4 SW-503 SINGLE GRATE INTAKE WITH MANHOLE
NOT TO SCALE

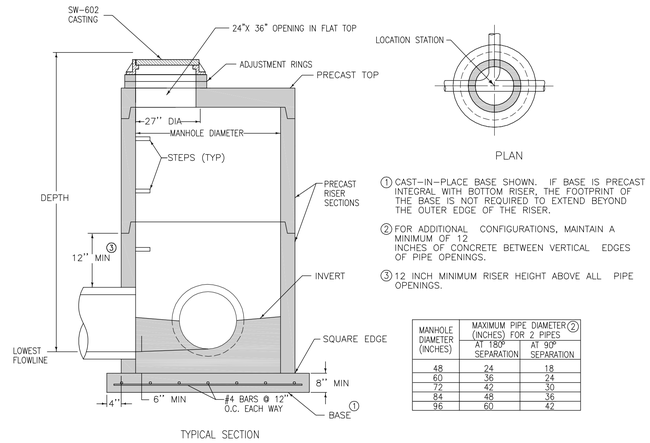

① CAST-IN-PLACE BASE SHOWN. IF BASE IS PRECAST INTEGRAL WITH BOTTOM RISER, THE FOOTPRINT OF THE BASE IS NOT REQUIRED TO EXTEND BEYOND THE OUTER EDGE OF THE RISER.

② FOR ADDITIONAL CONFIGURATIONS, MAINTAIN A MINIMUM OF 12 INCHES OF CONCRETE BETWEEN VERTICAL EDGES OF PIPE OPENINGS.

③ 12 INCH MINIMUM RISER HEIGHT ABOVE ALL PIPE OPENINGS.

MANHOLE DIAMETER (INCHES)	MAXIMUM PIPE DIAMETER ② (INCHES) FOR 2 PIPES	
	AT 180° SEPARATION	AT 90° SEPARATION
48	24	18
60	36	24
72	42	30
84	48	36
96	60	42

3 SW-401 CIRCULAR STORM SEWER MANHOLE
NOT TO SCALE

① FOR ADDITIONAL CONFIGURATIONS, MAINTAIN A MINIMUM OF 12 INCHES OF CONCRETE BETWEEN VERTICAL EDGES OF PIPE OPENINGS.

② 12 INCH MINIMUM RISER HEIGHT ABOVE ALL PIPE OPENINGS.

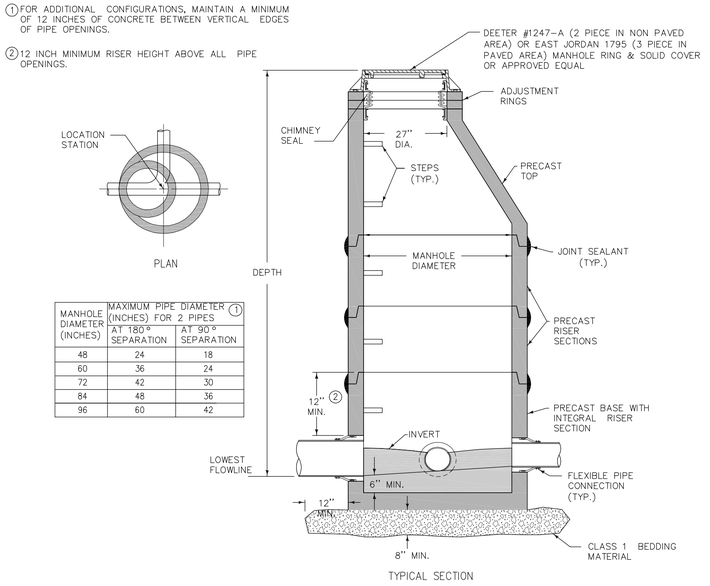

MANHOLE DIAMETER (INCHES)	MAXIMUM PIPE DIAMETER ① (INCHES) FOR 2 PIPES	
	AT 180° SEPARATION	AT 90° SEPARATION
48	24	18
60	36	24
72	42	30
84	48	36
96	60	42

2 SW-301 CIRCULAR SANITARY SEWER MANHOLE
NOT TO SCALE

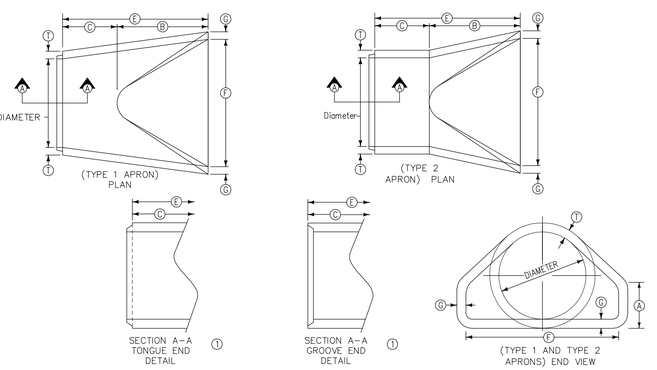

WHERE 1500D PIPE IS USED, THE BARREL PORTION OF THE APRON SHALL MEET OR EXCEED THE REQUIREMENTS FOR 1500D PIPE. WHERE 2000D PIPE IS USED, THE BARREL PORTION OF THE APRON SHALL MEET OR EXCEED THE REQUIREMENTS FOR 2000D PIPE.

REINFORCEMENT FOR THE BARREL PORTION OF THE APRON SHALL BE AS SHOWN ON IDOT STANDARD ROAD PLAN RF-1.

DIMENSION 'E' SHOWN IS MINIMUM AND SHALL BE CONSIDERED THE DESIGN LENGTH. ANY DIFFERENCE BETWEEN THE ACTUAL LENGTH OF CONCRETE APRON INSTALLED AND THE LENGTH INDICATED HEREON SHALL BE APPROPRIATELY ADJUSTED FOR IN THE LENGTH OF CONCRETE CULVERT PIPE FURNISHED.

WHEN SPECIFIED IN THE CONTRACT DOCUMENTS, PIPE APRON GUARDS SHALL BE INSTALLED AS SHOWN. PIPE APRON GUARDS WILL NOT BE MEASURED SEPARATELY FOR PAYMENT, BUT SHALL BE INCLUDED IN THE CONTRACT UNIT PRICE FOR "CONCRETE APRONS."

① TONGUE END USED ON INLET END SECTION, GROOVE END USED ON OUTLET END SECTION. DIMENSIONS FOR TONGUE AND GROOVE CONNECTIONS SHALL BE AS INDICATED ON IDOT STANDARD ROAD PLAN RF-1.

TYPE 1 APRONS								
DIAM.	SLOPE	A	B	MINIMUM C	MINIMUM E	F	G	T
12"	2.4:1	4"	2'-0"	4'-3⅜"	6'-3⅜"	2'-0"	2"	2"
15"	2.4:1	6"	2'-3"	3'-10"	6'-1"	2'-6"	2¼"	2¼"
18"	2.3:1	9"	2'-3"	3'-10"	6'-1"	3'-0"	2½"	2½"
21"	2.4:1	9"	3'-0"	3'-11½"	6'-11½"	3'-5"	3"	3"
24"	2.5:1	9½"	3'-7½"	2'-6"	6'-11½"	4'-0"	3"	3"
27"	2.5:1	10½"	4'-1"	2'-0"	6'-11½"	4'-4"	3½"	3½"
30"	2.5:1	12"	4'-6"	1'-7⅜"	6'-11⅜"	5'-0"	3½"	3½"
36"	2.5:1	15"	5'-3"	2'-9"	8'-0"	6'-0"	4"	4"
42"	2.5:1	21"	5'-3"	2'-9"	8'-0"	6'-6"	4½"	4½"
48"	2.5:1	24"	6'-0"	2'-0"	8'-0"	7'-0"	5"	5"
54"	1.8:1	27"	5'-0"	3'-0"	8'-0"	7'-6"	5½"	5½"
60"	1.6:1	29½"	5'-0"	3'-0"	8'-0"	8'-0"	5½"	6"
66"	1.7:1	30"	6'-0"	2'-3"	8'-3"	8'-0"	6½"	6"
72"	1.6:1	30"	6'-6"	1'-9"	8'-3"	9'-0"	6"	7"
78"	1.8:1	36"	7'-6"	1'-9"	9'-3"	9'-6"	6½"	7½"
84"	1.3:1	29½"	6'-9"	2'-6½"	9'-3¾"	10'-0"	6½"	8"

TYPE 2 APRONS								
DIAM.	SLOPE	A	B	MINIMUM C	MINIMUM E	F	G	T
12"	2.4:1	4"	2'-0"	4'-3⅜"	6'-3⅜"	2'-0"	2"	2"
15"	2.4:1	6"	2'-3"	3'-10"	6'-1"	2'-6"	2¼"	2¼"
18"	2.3:1	9"	2'-3"	3'-10"	6'-1"	3'-0"	2½"	2½"
21"	2.4:1	9"	3'-0"	3'-11½"	6'-11½"	3'-5"	3"	3"
24"	2.5:1	9½"	3'-7½"	2'-6"	6'-11½"	4'-0"	3"	3"
27"	2.5:1	10½"	4'-1"	2'-0"	6'-11½"	4'-4"	3½"	3½"
30"	2.5:1	12"	4'-6"	1'-7⅜"	6'-11⅜"	5'-0"	3½"	3½"
36"	2.5:1	15"	5'-3"	2'-9"	8'-0"	6'-0"	4"	4"
42"	2.5:1	21"	5'-3"	2'-9"	8'-0"	6'-6"	4½"	4½"
48"	2.5:1	24"	6'-0"	2'-0"	8'-0"	7'-0"	5"	5"
54"	1.9:1	24½"	5'-5"	2'-7"	8'-0"	7'-6"	5½"	5½"
60"	1.4:1	24½"	5'-0"	3'-0"	8'-0"	8'-0"	5½"	6"
66"	1.7:1	30"	6'-0"	2'-3"	8'-3"	8'-0"	6½"	6"
72"	1.4:1	24"	6'-6"	1'-9"	8'-3"	9'-0"	6"	7"
78"	1.8:1	36"	7'-6"	1'-9"	9'-3"	9'-6"	6½"	7½"
84"	1.5:1	23½"	7'-6½"	1'-9"	9'-3¾"	10'-0"	6½"	8"

1 RCP APRON AND APRON GUARD
NOT TO SCALE

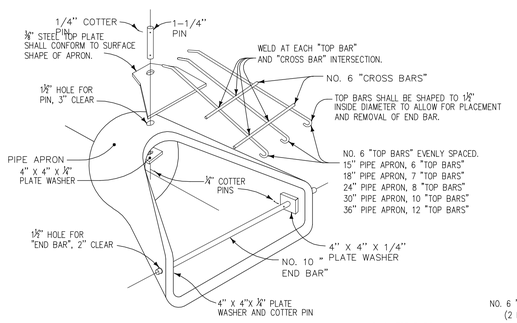

(TYPICAL FOR ALL SIZES OF APRONS)
INSTALLATION VIEW

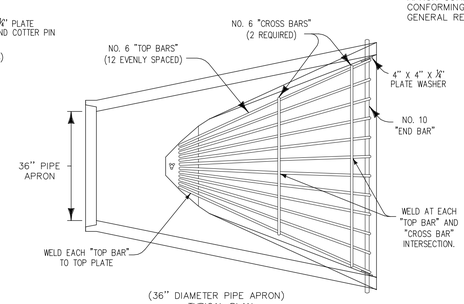

(36" DIAMETER PIPE APRON)
TYPICAL PLAN

GENERAL NOTES:

THE INTENT OF THE PIPE APRON GUARD DETAILED HEREON IS TO PROVIDE A TREATMENT FOR THE EXPOSED END OF A PIPE CULVERT, SUCH THAT AN OUT-OF-CONTROL VEHICLE COULD PASS OVER THE END OF THE CULVERT WITHOUT UNDUE LOSS OF CONTROL OR DAMAGE TO THE VEHICLE.

STEEL BARS USED IN CONSTRUCTION OF THE GUARD SHALL BE ASTM A 615, GRADE 40, OR MERCHANT QUALITY, SMOOTH OR DEFORMED STEEL CONFORMING TO THE FABRICATION REQUIREMENTS OF SECTION 2404 OF THE CURRENT STANDARD SPECIFICATIONS.

WELDING OF STEEL PARTS SHALL BE AS SHOWN AND SUBJECT TO THE APPROVAL OF THE ENGINEER. THE COMPLETED APRON GUARD SHALL BE HOTDIP GALVANIZED IN ACCORDANCE WITH CURRENT ASTM A 123 SPECIFICATIONS.

DETAILS INDICATED ARE FOR A TYPE 1 APRON AS SHOWN ON STANDARD ROAD PLAN RF-3. APPROPRIATE MODIFICATION OF APRON GUARD SHOWN MAY BE MADE FOR A TYPE 2 APRON.

ALTERNATE DETAILS FOR DESIGN OF APRON GUARD MAY BE SUBMITTED TO THE ENGINEER FOR APPROVAL.

SPECIAL NOTE:

WHEN DETAIL PROJECT PLANS REQUIRE PIPE APRON GUARDS OF SIZES OTHER THAN THOSE SHOWN HEREON, THE DESIGN FOR SUCH APRON GUARDS SHALL BE SIMILAR TO THOSE INDICATED, CONFORMING TO MINIMUM BAR SIZE AND SPACING, AND OTHER GENERAL REQUIREMENTS SHOWN.

REVISIONS		DATE
CITY COUNCIL SUBMITTAL #3		12-16-13
SITE PLAN SUBMITTAL #3		12-10-13
SITE PLAN SUBMITTAL #2		11-26-13
SITE PLAN SUBMITTAL #1		11-12-13

3405 S.E. CROSSROADS DRIVE, SUITE G
GRIMES, IOWA 50111
PHONE: (515) 369-4400 FAX: (515) 369-4410
ENGINEER: JAT | TECH: DAM

CIVIL DESIGN ADVANTAGE

WAUKEE, IOWA

SPRINGS AT PRAIRIE CROSSING

DETAILS

C9.9

1309.381

FILE: H:\2013\1309381\LDWG\1309381-COVER DETAILS.DWG
PLOT DATE: 12/16/2013 2:14 PM
PLOTTED BY: DOUG MANDERNACH
COMMENT:
TECH:
ENG:

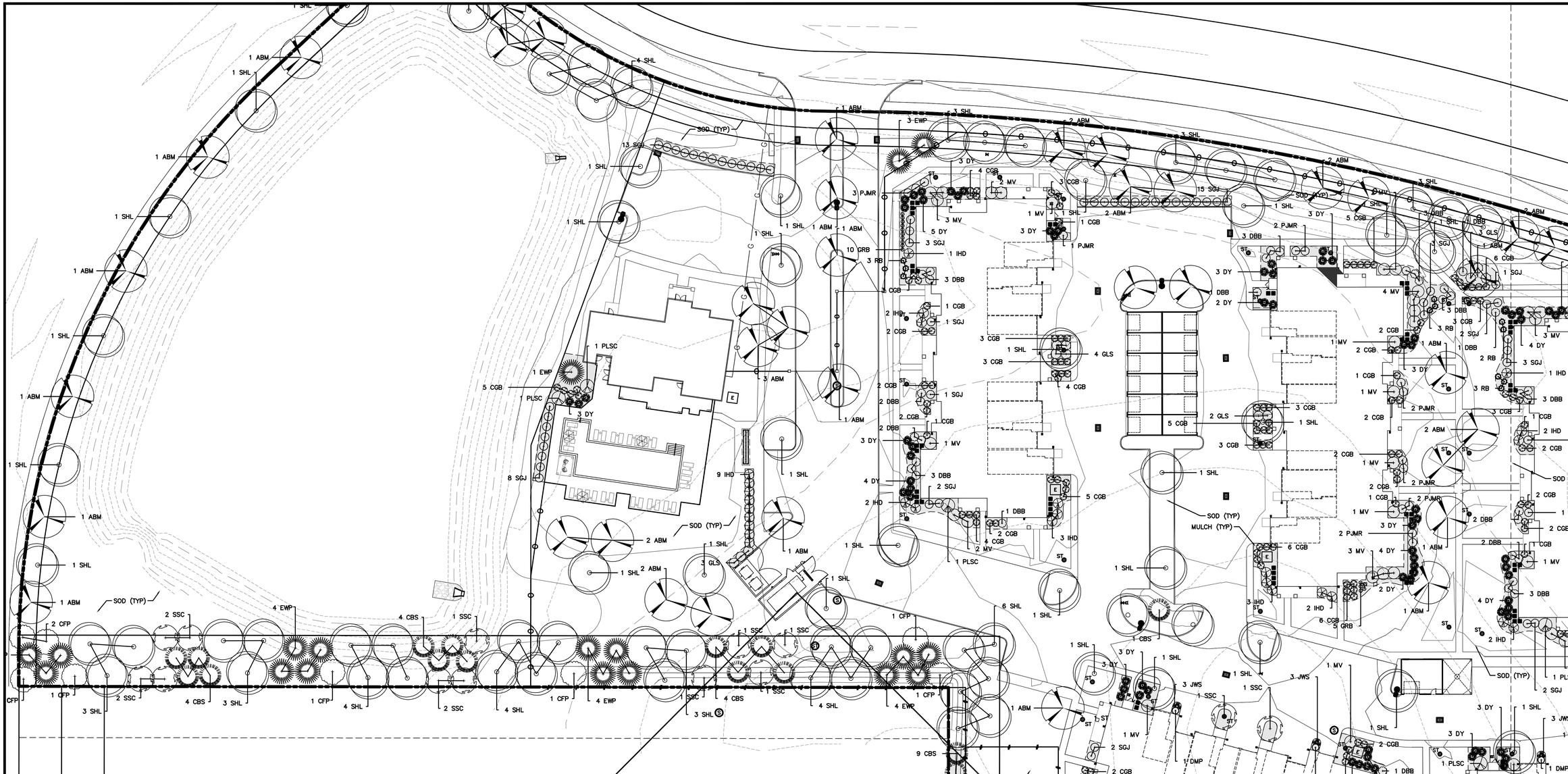

PLANT SCHEDULE

Broadleaf Deciduous

Code Name	Common Name	Scientific Name	Planting Size	Quantity
ABM	Autumn Blaze Maple	Acer rubrum 'Autumn Blaze'	B&B, 2" CAL	108
CFP	Chanticleer Flowering Pear	Pyrus calleryana 'Glen's Form'	B&B, 1.5" CAL	43
SHL	Skyline Honey Locust	Gleditsia triacanthos var. inermis 'Skycole' (Skyline)	B&B, 2" CAL	229
ST	Smoke tree	Cotinus coggygria	B&B, 1.5" CAL, MULTI-STEM	6
SSC	Spring Snow Crabapple	Malus 'Spring Snow'	B&B, 1.5" CAL	63

Conifer Evergreen

Code Name	Common Name	Scientific Name	Planting Size	Quantity
CBS	Colorado Blue Spruce	Picea pungens 'Glauca'	B&B, 6' HEIGHT	90
EWP	Eastern White Pine	Pinus strobus	B&B, 6' HEIGHT	73

Shrub

Code Name	Common Name	Scientific Name	Planting Size	Quantity
GLS	'Gro-Low' Sumac	Rhus aromatica 'Gro-Low'	CONT, 3 GAL	36
CGB	Chicagoland Green Boxwood	Buxus x 'Glencoe'	CONT, 3 GAL	455
DY	Dense Yew	Taxus x media 'Densiformis'	CONT, 3 GAL	224
DBB	Dwarf Burning Bush	Euonymus alatus 'Compactus'	CONT, 3 GAL	135
DMP	Dwarf Mugo Pine	Pinus mugo 'Compacta'	CONT, 3 GAL	10
GRB	Golden Ruby Barberry	Berberis thunbergii 'Goruzam'	CONT, 3 GAL	30
IHD	Ivory Halo Dogwood	Cornus alba 'Bailhalo'	CONT, 3 GAL	87
JWS	Japanese White Spirea	Spiraea albiflora	CONT, 3 GAL	30
MV	Mohican Viburnum	Viburnum lantana 'Mohican'	CONT, 3 GAL	115
PJMR	PJM Rhododendron	Rhododendron 'PJM'	CONT, 3 GAL	80
PLSC	Purpleleaf sand cherry	Prunus cistena	B&B, 3" CAL	20
RB	Rose Glow Japanese Barberry	Berberis thunbergii 'Rose Glow'	CONT, 3 GAL	40
SGJ	Sea Green Juniper	Juniperus chinensis 'Sea Green'	CONT, 3 GAL	208

REVISIONS	DATE
CITY COUNCIL SUBMITTAL #3	12-16-13
SITE PLAN SUBMITTAL #3	12-10-13
SITE PLAN SUBMITTAL #2	11-26-13
SITE PLAN SUBMITTAL #1	11-12-13

3405 S.E. CROSSROADS DRIVE, SUITE G
GRIMES, IOWA 50111
PHONE: (515) 369-4400 FAX: (515) 369-4410
ENGINEER: JAT
TECH: DAM
CIVIL DESIGN ADVANTAGE

SPRINGS AT PRAIRIE CROSSING

LANDSCAPE PLAN

WAUKEE, IOWA

L1.1

1309.381

FILE: H:\2013\1309381\DWG\1309381-LANDSCAPE.DWG
FILE DATE: 12/13/13 DATE PLOTTED: 12/16/2013 2:08 PM
PLOTTED BY: DOUG MANDERNACH
COMMENT:
TECH: ENG:

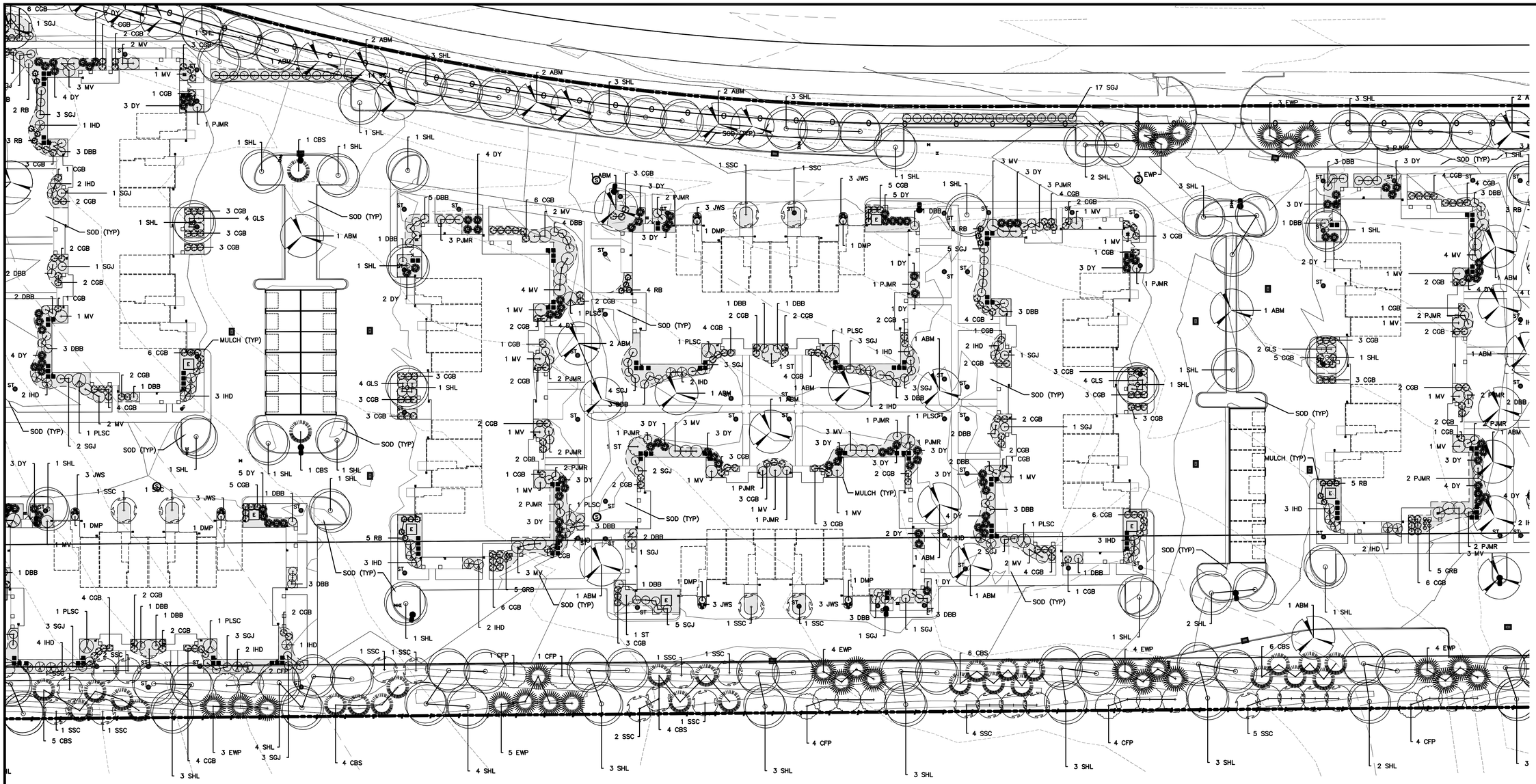

GENERAL LANDSCAPE REQUIREMENTS

SITE AREA:	920,590 SF
OPEN SPACE REQUIRED (20%):	184,118 SF
OPEN SPACE PROVIDED (54%):	493,397 SF
STREET FRONTAGE:	2,670 LF
MINIMUM PLANTING REQUIREMENTS	
1 TREE/ 1,000 SF OF REQUIRED OPEN SPACE:	185 TREES
1 TREE/ 40 LF OF STREET FRONTAGE:	75 TREES
	260 TREES
1 SHRUB/ 1,000 SF OF REQUIRED OPEN SPACE:	184 SHRUBS
TREES PROVIDED:	260 TREES
SHRUBS PROVIDED:	1,470 SHRUBS

*50% OF TREES MUST BE OVERSTORY AND
25% OF TREES MUST BE EVERGREEN
OVERSTORY TREES 8' HEIGHT MINIMUM
EVERGREEN TREES AND ORNAMENTAL TREES 6' HEIGHT MINIMUM

PARKING LOT LANDSCAPE REQUIREMENTS

MINIMUM PLANTING REQUIREMENTS	
1 TREE/ PARKING LOT ISLAND:	17 TREES
TREES PROVIDED:	17 TREES

*ALL LANDSCAPE ISLANDS ARE TO BE CONTINUOUSLY COVERED WITH PLANT MATERIAL, MULCH, OR LAWN

30' BUFFER LANDSCAPE REQUIREMENTS

EASEMENT:	2,437 LF
MINIMUM PLANTING REQUIREMENTS	
2 OVERSTORY TREE/ 50 LF OF EASEMENT:	96 TREES
3 EVERGREEN TREES/ 50 LF OF EASEMENT:	143 TREES
2 ORNAMENTAL TREES/ 50 LF OF EASEMENT:	96 TREES
OVERSTORY TREES PROVIDED:	96 TREES
EVERGREEN TREES PROVIDED:	143 TREES
ORNAMENTAL TREES PROVIDED:	96 TREES

LANDSCAPE NOTES

1. LOCATE ALL UTILITIES BEFORE ANY PLANTING BEGINS.
2. THE MOST RECENT EDITION OF THE SUDAS STANDARD SPECIFICATIONS AND ALL CITY SUPPLEMENTALS, IF APPLICABLE, SHALL APPLY TO ALL WORK ON THIS PROJECT UNLESS OTHERWISE NOTED.
3. TYPE, SIZE, AND QUALITY OF PLANT MATERIAL SHALL CONFORM TO THE MOST CURRENT EDITION OF THE AMERICAN STANDARD FOR NURSERY STOCK ANSI Z60.1
4. ALL PLANT MATERIAL SHALL BE HEALTHY SPECIMENS WITHOUT DEFORMITIES, VOIDS AND OPEN SPACES, WITH WELL DEVELOPED BRANCH AND ROOT SYSTEMS; TRUE TO HEIGHT, SHAPE AND CHARACTER OF GROWTH OF THE SPECIES OR VARIETY.
5. SOD ALL DISTURBED AREAS AS DIRECTED BY OWNER.
6. BACKFILL TO TOP OF CURB. (MINUS 1 1/2" FOR SOD, IF REQ.)
7. WEED PREVENTER (PRE-EMERGENT) SHALL BE SPREAD OVER SOIL AFTER PLANTING AND BEFORE MULCHING IN ALL PLANTING BEDS PER MANUFACTURER'S RECOMMENDATIONS.
8. SHREDDED HARDWOOD MULCH SHALL BE PLACED AROUND ALL TREES, SHRUBS AND IN ALL PLANTING BEDS TO A (MIN) DEPTH OF 3".
9. ALL EDGING SHALL BE SPADE CUT EDGE.
10. PLANT QUANTITIES ARE SHOWN FOR INFORMATION ONLY, THE DRAWING SHALL PREVAIL IF ANY CONFLICTS ARISE.
11. ALL DEBRIS SPILLED IN THE PUBLIC R.O.W. SHALL BE PICKED UP BY THE CONTRACTOR AT THE END OF EACH WORK DAY AND PRIOR TO A STORM EVENT.
12. CONTRACTOR SHALL WARRANTY ALL PLANT MATERIALS FOR A PERIOD OF ONE YEAR FROM DATE OF INSTALLATION.
13. CONTRACTOR SHALL PROVIDE IRRIGATION DESIGN TO OWNER, IF REQUESTED, FOR APPROVAL.
14. PERMANENT OCCUPANCY OF THE BUILDINGS SUBJECT TO IDNR REQUIREMENTS FOR SITE ESTABLISHMENT.
15. ALL IRRIGATION TO BE PLACED OUTSIDE OF THE ROW UNLESS OTHERWISE APPROVED BY THE CITY OF WAUKEE.

N

SCALE
0' 15' 30' 60'

REVISIONS	DATE
CITY COUNCIL SUBMITTAL #3	12-16-13
SITE PLAN SUBMITTAL #3	12-10-13
SITE PLAN SUBMITTAL #2	11-26-13
SITE PLAN SUBMITTAL #1	11-12-13

3405 S.E. CROSSROADS DRIVE, SUITE G
GRIMES, IOWA 50111
PHONE: (515) 369-4400 FAX: (515) 369-4410
ENGINEER: JAT
TECH: DAM
CIVIL DESIGN ADVANTAGE

SPRINGS AT PRAIRIE CROSSING
LANDSCAPE PLAN

WAUKEE, IOWA

L1.2

1309.381

FILE: H:\2013\1309381\DWG\1309381-LANDSCAPE.DWG
FILE DATE: 12/13/13 DATE PLOTTED: 12/16/2013 2:08 PM
PLOTTED BY: DOUG MANDERNACH
COMMENT:
TECH:
ENG:

FILE: H:\2013\1309381\DWG\1309381-LANDSCAPE.DWG
FILE DATE: 12/13/13 DATE PLOTTED: 12/16/2013 2:07 PM COMMENT:
PLOTTED BY: DOUG MANDERNACH TECH: ENG:

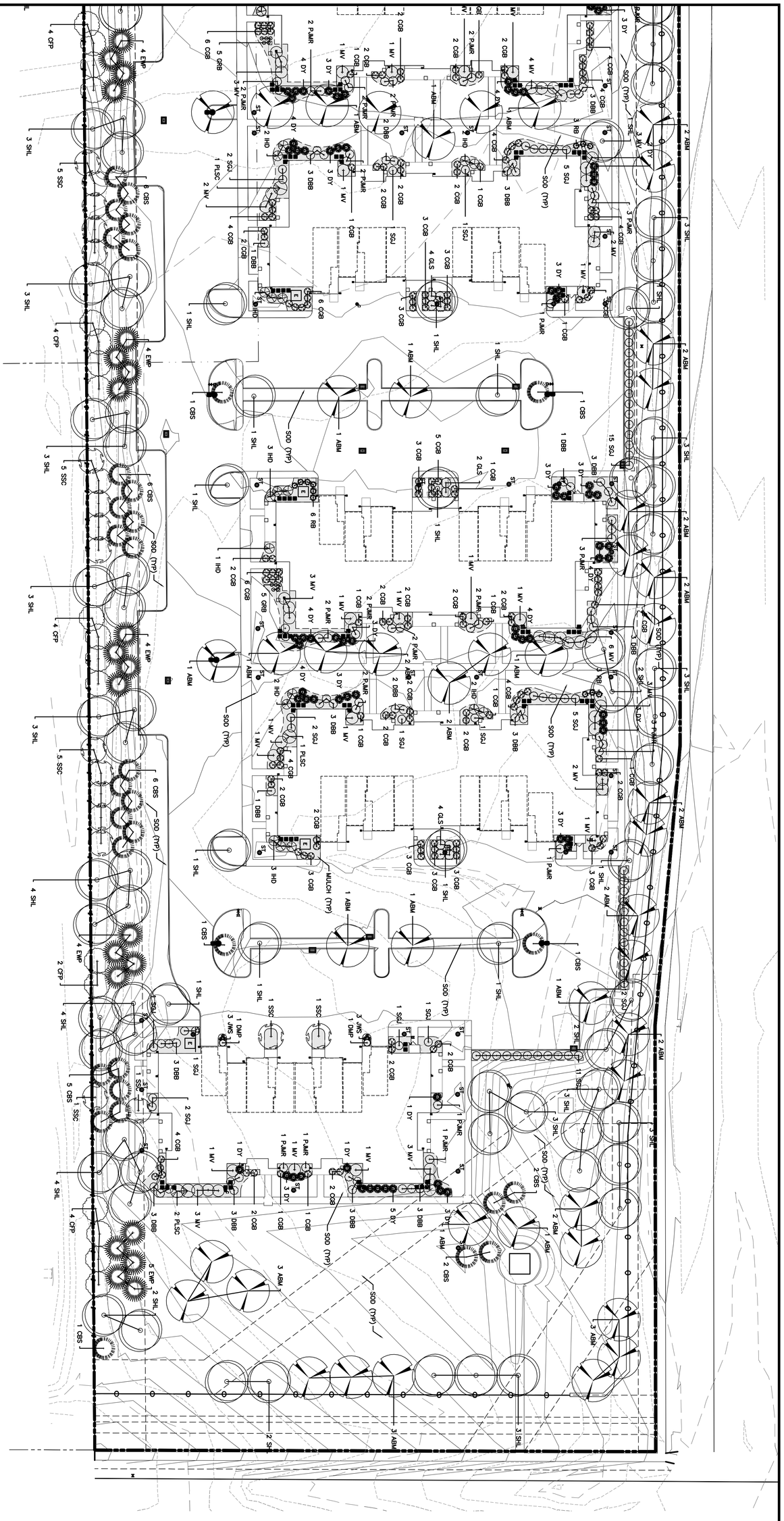

L1.3
1309.381

SPRINGS AT PRAIRIE CROSSING
LANDSCAPE PLAN

WAUKEE, IOWA

CIVIL DESIGN ADVANTAGE
3405 S.E. CROSSROADS DRIVE, SUITE G
GRIMES, IOWA 50111
PHONE: (515) 369-4400 FAX: (515) 369-4410
ENGINEER: JAT TECH: DAM

REVISIONS	DATE
CITY COUNCIL SUBMITTAL #3	12-16-13
SITE PLAN SUBMITTAL #3	12-10-13
SITE PLAN SUBMITTAL #2	11-26-13
SITE PLAN SUBMITTAL #1	11-12-13

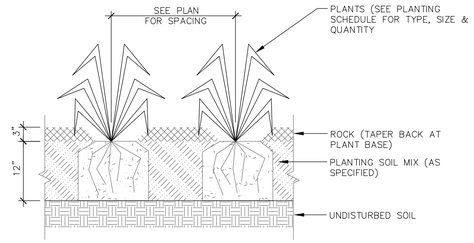

1 SHRUB PLANTING
NOT TO SCALE

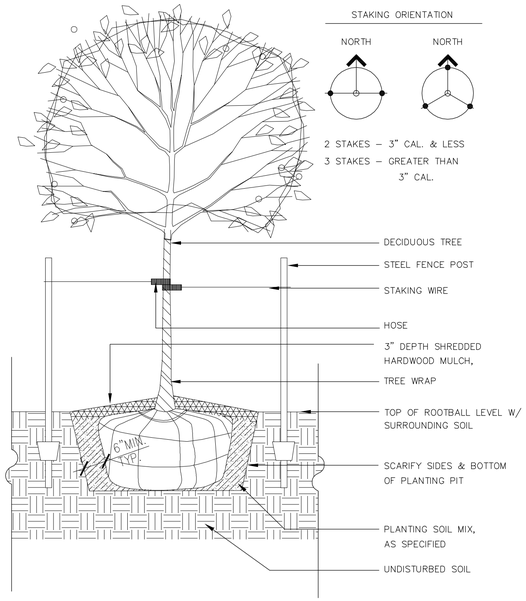

2 DECIDUOUS TREE PLANTING
NOT TO SCALE

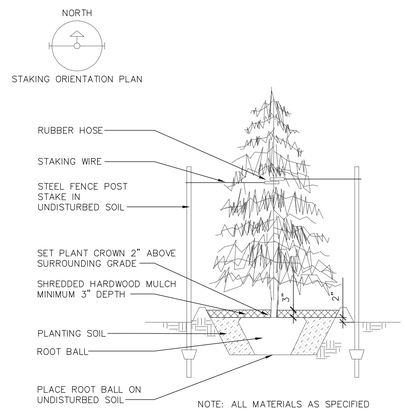

3 CONIFEROUS TREE PLANTING
NOT TO SCALE

3405 S.E. CROSSROADS DRIVE, SUITE G
GRIMES, IOWA 50111
PHONE: (515) 369-4400 FAX: (515) 369-4410
ENGINEER: JAT | TECH: DAM

REVISIONS	DATE
CITY COUNCIL SUBMITTAL #3	12-16-13
SITE PLAN SUBMITTAL #3	12-10-13
SITE PLAN SUBMITTAL #2	11-26-13
SITE PLAN SUBMITTAL #1	11-12-13

CIVIL DESIGN ADVANTAGE

SPRINGS AT PRAIRIE CROSSING

DETAILS

WAUKEE, IOWA

L2.1

1309.381

FILE: H:\2013\1309381\LDWG\1309381-COVER DETAILS.DWG
XREF: PAN13-0013_SITE PLAN.DWG PLOTTED: 12/16/2013 2:08 PM
PLOTTED BY: DOUG MANDERNACH
COMMENT:
TECH: ENG