# THE SHOPPES AT WILLIAMS POINTE
# SITE IMPROVEMENT PLAN

## SHEET INDEX:


C0.1 COVER SHEET
C1.1 DEMO PLAN
C2.1 LAYOUT PLAN
C3.1 GRADING PLAN
C4.1 UTILITY PLAN
C5.1 LANDSCAPE PLAN
C6.1 DETAILS SHEET
C6.2 DETAILS SHEET
C6.3 STORMTECH DETAILS
C7.1 SWPPP


### LEGAL DESCRIPTION:

LOT 1 WILLIAMS POINTE PLAT 14, AN OFFICIAL PLAT NOW INCLUDED IN AND FORMING A PART OF THE CITY OF WAUKEE, DALLAS COUNTY, IOWA.

SAID TRACT OF LAND BEING SUBJECT TO AND TOGETHER WITH ANY AND ALL EASEMENTS OF RECORD.

### ADDRESS:

1300 E. HICKMAN ROAD
WAUKEE, IA 50263

### OWNER:

LEG INVESTMENT, LC
CONTACT: RICHARD MARGULIES
1603 22ND STREET, SUITE 103
WEST DES MOINES, IA 50265
PH: 515-226-9300

### PREPARED FOR:

FERGUSON REALTY
CONTACT: DARIN FERGUSON
1840 NW 118TH ST, SUITE 100
CLIVE, IA 50325
PH: 515-440-0600

### SITE AREA:

204,120 SQ. FT. = 4.69 ACRES

### ZONING:

PD C-1
PLANNED DEVELOPMENT OVERLAY DISTRICT & COMMUNTY & HIGHWAY SERVICE COMMERCIAL DISTRICT
ALL LOTS WITHIN 600' OF HIGHWAY 6 AND ALICE'S ROAD SHALL ADHERE TO THE ARTERIAL CORRIDOR OVERLAY STANDARDS LOCATED IN SECTION 304.5(M.7) OF THE WAUKEE ZONING CODE.

BUILDING SETBACK:
FRONT = 25 FEET
SIDE = NONE
REAR = 25 FEET
PARKING LOT SETBACK = 10 FEET

### BENCHMARK:

BM: NE TAGGED BURY BOLT ON FIRE HYDRANT LOCATED AT THE NE CORNER OF SE LEGACY POINT BOULEVARD AND SE LAUREL DRIVE
ELEVATION = 1036.60 (FROM WILIAMS POINTE PLAT 14)

SITE BM: ARROW ON FIRE HYDRANT LOCATED AT THE SE CORNER OF HICKMAN ROAD AND SE BRICK DRIVE
ELEVATION = 1020.40

## GENERAL NOTES:

1. ALL WORK SHALL BE DONE IN ACCORDANCE WITH WAUKEE STANDARD SPECIFICATIONS. THE CITY OF WAUKEE ENGINEERING DEPARTMENT MUST BE NOTIFIED BY ALL CONTRACTORS 48 HOURS PRIOR TO COMMENCING WORK.
2. IN EVENT OF A DISCREPANCY BETWEEN THE QUANTITY ESTIMATES AND THE DETAILED PLANS, THE DETAILED PLANS SHALL GOVERN.
3. THE CONTRACTOR SHALL BE RESPONSIBLE FOR THE LOCATION OF ALL UTILITIES. ANY DAMAGE TO SAID UTILITIES SHALL BE REPAIRED AT THE CONTRACTORS EXPENSE.
4. ALL WORK SHALL BE DONE IN ACCORDANCE WITH THE CURRENT O.S.H.A. CODES AND STANDARDS. NOTHING INDICATED ON THESE PLANS SHALL RELIEVE THE CONTRACTOR FROM COMPLYING WITH THE APPROPRIATE SAFETY REGULATIONS.
5. ALL NECESSARY CONSTRUCTION SIGNS, BARRICADES AND OTHER TRAFFIC CONTROL DEVICES REQUIRED DURING CONSTRUCTION WILL BE FURNISHED BY THE CONTRACTOR. SIGNS, BARRICADES AND OTHER TRAFFIC CONTROL DEVICES MUST BE IN CONFORMANCE WITH THE "MANUAL ON UNIFORM TRAFFIC CONTROL DEVICES FOR STREETS AND HIGHWAYS."
6. BISHOP ENGINEERING SHALL NOT BE LIABLE FOR ANY INJURIES THAT HAPPEN ON SITE. THIS SHALL INCLUDE BUT NOT BE LIMITED TO TRENCH COLLAPSES FROM VARYING SOIL CONDITIONS OR INJURIES CAUSED BY UNDERGROUND UTILITIES INCLUDING UTILITIES THAT ARE NOT SHOWN ON PLAN.
7. THE CONTRACTOR IS LIABLE FOR ALL DAMAGES TO PUBLIC OR PRIVATE PROPERTY CAUSED BY THEIR ACTION OR INACTION IN PROVIDING FOR STORM WATER FLOW DURING CONSTRUCTION. DO NOT RESTRICT FLOWS IN EXISTING DRAINAGE CHANNELS, STORM SEWER, OR FACILITIES.
8. THE CONTRACTOR SHALL SUBMIT TO THE ENGINEER A SCHEDULE FOR PERFORMANCE OF WORK ITEMS. THIS SCHEDULE SHALL BE PROVIDED BY THE CONTRACTOR AT THE PROJECT PRECONSTRUCTION CONFERENCE. NO WORK SHALL BEGIN UNTIL A SCHEDULE HAS BEEN SUBMITTED AND ACCEPTED. THE CONTRACTOR SHALL THEN PERFORM WORK TO CONFORM TO THE ACCEPTED SCHEDULE.
9. LABORATORY TESTS SHALL BE PERFORMED BY THE CONTRACTOR UNLESS OTHERWISE NOTED. THE CONTRACTOR SHALL PROVIDE SAMPLES OF MATERIAL REQUIRED FOR LABORATORY TESTS AND TESTING IN ACCORDANCE WITH THE URBAN STANDARD SPECIFICATIONS FOR PUBLIC IMPROVEMENTS.
10. SOIL OVERHAUL ON THIS PROJECT SHALL BE CONSIDERED INCIDENTAL AND WILL NOT BE MEASURED OR PAID FOR SEPARATELY.
11. THE CONTRACTOR SHALL PROTECT ALL STRUCTURES NOT SHOWN AS REMOVALS ON THE PLANS.
12. THE CONTRACTOR SHALL OBTAIN ANY AND ALL NECESSARY PERMITS PRIOR TO ANY CONSTRUCTION. CONTRACTOR SHALL WORK WITH OWNER OR OWNERS REPRESENTATIVE ON ALL REQUIRED STORM WATER DISCHARGE PERMITS FROM THE IOWA DEPARTMENT OF NATURAL RESOURCES AND THE CITY OF WAUKEE.
13. GRADING AND EROSION CONTROL SHALL BE DONE IN ACCORDANCE WITH THE APPROVED GRADING PLAN, SWPPP, NPDES DOCUMENTS, AND IOWA DEPARTMENT OF NATURAL RESOURCES REQUIREMENTS.
14. THE CONTRACTOR SHALL PICK UP ANY DEBRIS SPILLED ONTO THE ADJACENT RIGHT OF WAY OR ABUTTING PROPERTIES AS THE RESULT OF CONSTRUCTION, AT THE END OF EACH WORK DAY.
15. THE OWNER OR OWNER'S AGENT IS RESPONSIBLE FOR THE PROMPT REMOVAL OF ALL MUD THAT HAS BEEN TRACKED OR WASHED UNTO ADJACENT PROPERTY OR RIGHT OF WAY UNTIL SUCH TIME THAT PERMANENT VEGETATION HAS BEEN ESTABLISHED.
16. DISPOSE OF ALL EXCESS MATERIALS AND TRASH IN ACCORDANCE WITH FEDERAL, STATE, AND LOCAL REQUIREMENTS. PROVIDE WASTE AREAS OR DISPOSAL SITES FOR EXCESS MATERIALS NOT DESIRABLE FOR INCORPORATION INTO THE PROJECT.
17. THE PAVING/ GRADING CONTRACTOR SHALL BACKFILL THE PAVING SLAB AND FINE GRADE THE RIGHT OF WAY AS SOON AFTER THE PAVING AS POSSIBLE. ALL AREAS SHALL BE SEEDED IN ACCORDANCE WITH CITY OF WAUKEE STANDARD SPECIFICATIONS AND SUDAS 2013.
18. SUBGRADE PREPARATION AND PAVEMENTS WILL BE CONSTRUCTED FOLLOWING RECOMMENDATIONS IN THE SOILS REPORT. APPROVED SOILS ENGINEER MUST SIGN OFF ON SUBASE PRIOR TO ANY PAVEMENT BEING PLACED.
19. ALL P.C.C. PAVEMENT SHALL BE A C-4 MIX. SEE DETAILS FOR ALL PAVEMENT THICKNESS.
20. ALL PEDESTRIAN WALKWAYS THAT UNLOAD INTO A VEHICLES TRAVELED PATH WITHIN THE PUBLIC RIGHT-OF-WAY MUST HAVE A.D.A. DETECTABLE WARNING PLANEL(S) AS PER A.D.A. REGULATIONS. PANEL TYPE & COLOR SHALL BE PER CITY STANDARD.
21. ALL WALKS, PARKING LOTS, HANDICAP PARKING, RAMPS, ETC. SHALL COMPLY WITH ALL A.D.A. AND CITY CODES. HANDICAP PARKING SIGNAGE IS REQUIRED FOR ALL HANDICAP STALLS AND SHALL BE CONSIDERED INCIDENTAL. IN EVENT OF A DISCREPANCY BETWEEN THE PLANS AND THE A.D.A./CITY CODES THE A.D.A./CITY CODES SHALL GOVERN. CONTRACTOR SHALL BE RESPONSIBLE FOR ENSURING A.D.A. CODES ARE MET.
22. QUANTITY CALLOUTS ON PIPE LENGTHS ARE APPROXIMATE AND SHOULD BE USED FOR REFERENCE ONLY.
23. THE CONTRACTOR SHALL PROVIDE AS-BUILTS OF ALL UTILITIES, INCLUDING DEPTH AND LOCATION OF ALL SERVICES.
24. THE CONTRACTOR SHALL BE RESPONSIBLE FOR AS-BUILT TOPO OF DETENTION POND & DETENTION POND STORM SEWER. CONTRACTOR SHALL CONTACT BISHOP ENGINEERING (CHARLES BISHOP AT 515-276-0467) TO PERFORM SAID AS-BUILT SURVEY. IF DETENTION PONDS HAVE BEEN GRADED INCORRECTLY, CONTRACTOR SHALL BE RESPONSIBLE FOR ALL SUBSEQUENT AS-BUILT TOPO SURVEYS UNTIL ISSUES HAVE BEEN RECTIFIED.
25. THE CONTRACTOR SHALL COORDINATE THE ADJUSTMENT OF ANY AND ALL EXISTING AND PROPOSED UTILITIES TO PROPOSED GRADES. EXISTING UTILITIES SHALL BE RAISED OR LOWERED IN ACCORDANCE WITH THE UTILITY OWNER REQUIREMENTS. ANY NECESSARY ADJUSTMENTS SHALL BE CONSIDERED INCIDENTAL TO CONSTRUCTION.
26. ACTIVE EXISTING FIELD TILES ENCOUNTERED DURING CONSTRUCTION SHALL BE REPAIRED, REROUTED, OR CONNECTED TO PUBLIC OR PRIVATE STORM SEWER TO REMAIN IN SERVICE. CONTRACTOR TO PROVIDE AS-BUILT INFORMATION OF ALL EXISTING FIELD TILES ENCOUNTERED DURING CONSTRUCTION.
27. ALL PROPOSED RCP STORM SEWER PIPE JOINTS SHALL BE FABRIC WRAPPED AND THE LAST 3 PIPE SECTIONS ON THE APRON SHALL BE TIED WITH RF-14 TYPE II CONNECTORS. ALL APRONS SHALL HAVE A STANDARD FOOTING AND TRASH GUARD.
28. ALL RIP RAP CALLED OUT ON PLANS SHALL BE UNDERLAIN WITH ENGINEERING FABRIC.
29. SANITARY SERVICES SHALL MAINTAIN 18" OF VERTICAL SEPARATION FROM THE WATER MAIN WITH 18" OF COMPACTED LOW PERMEABILITY SOIL BETWEEN THE UTILITIES WITHIN 10' OF THE CROSSING.
30. MANDREL AND PRESSURE TESTS SHALL BE REQUIRED FOR ALL PROPOSED SANITARY LINES. TELEVISING OF THE SANITARY SEWER SYSTEM SHALL BE COMPLETED PRIOR TO PAVING UNLESS OTHERWISE APPROVED BY JURISDICTION.
31. WATER MAINS SHALL BE C-900. SIZE OF WATER MAIN AS SHOWN ON PLANS.
32. THRUST BLOCKS SHALL BE INSTALLED AS REQUIRED AND SHALL BE CONSIDERED INCIDENTAL TO WATER MAIN CONSTRUCTION.
33. PROPOSED WATER MAIN SHALL BE PRESSURE TESTED, BACTERIA TESTED AND CHLORINATED. THE FILLING OF THE WATER MAIN SHALL BE DONE BY THE CITY OF WAUKEE.
34. TRACER WIRE SHALL BE ADDED TO ALL WATER MAIN, AND BROUGHT TO THE SURFACE AT EVERY HYDRANT.
35. ALL HYDRANTS WILL IMMEDIATELY BE COVERED WITH A BLACK PLASTIC BAG (OR EQUIVALENT) ONCE THE HYDRANT IS INSTALLED. THE CITY OF WAUKEE WILL NOTIFY THE CONTRACTOR WHEN THE BAGS CAN BE REMOVED.
36. THE MINIMUM HYDRANT LEAD SHALL BE 3.5 FEET.
37. CONTRACTOR TO CLEAN AND TELEVISE ALL PROPOSED STORM SEWERS AND PROVIDE A COPY OF THE VIDEO TO THE CITY OF WAUKEE ENGINEERING DEPARTMENT.
38. WRITTEN APPROVAL BY THE CITY OF WAUKEE ENGINEERING DEPARTMENT IS REQUIRED FOR ALL PROPOSED CHANGES TO SITE INFRASTRUCTURE OR GRADES PRIOR TO PROCEEDING WITH ANY CHANGES. ALL COSTS ASSOCIATED WITH UNAPPROVED CHANGES TO THE SITE PLAN SHALL BE THE CONTRACTOR'S RESPONSIBILITY.

## UTILITY CONFLICTS:

-UTILITY CONFLICTS MAY EXIST ACROSS THE SITE WITH NEW UTILITIES, GRADING, PAVING ETC. MOST UTILITY CONFLICTS HAVE BEEN CALLED OUT FOR CONTRACTOR CONVENIENCE.
-CONTRACTOR IS RESPONSIBLE FOR ALL UTILITY CONFLICTS THAT ARE EITHER CALLED OUT ON THE PLANS OR THAT CAN BE SEEN ON THE PLANS BETWEEN AND EXISTING UTILITY AND PROPOSED CONSTRUCTION.
-IF CONTRACTOR FINDS ADDITIONAL UTILITY CONFLICTS DURING CONSTRUCTION: THE REQUIRED ADJUSTMENT OF EXISTING ELECTRIC LINES, IRRIGATION LINES, TELEPHONE LINES, WATER LESS THAN 6" IN DIAMETER, FIELD TILE LINES, AND CABLE TV LINES SHALL BE CONSIDERED INCIDENTAL TO THE PROJECT. THE DISCOVERY OF SANITARY SEWER, WATER MAINS 6" OR LARGER, FIBER OPTICS AND STORM SEWER 6" OR LARGER SHALL BE ELIGIBLE FOR A CHANGE ORDER NEGOTIATED PRIOR TO PROCEEDING WITH SAID WORK.
-THIS, HOWEVER DOES NOT RELIEVE CONTRACTOR OF ANY DAMAGE CAUSED TO EXISTING UTILITIES BY ANY AND ALL CONSTRUCTION ACTIVITIES.

## MINIMUM PROTECTION ELEVATION:

PER WILLIAMS POINTE PLAT 14, THE MINIMUM PROTECTION ELEVATION = 1014.50

## FUTURE LOT 1:

(FULL BUILD-OUT)

### PARKING REQUIREMENTS:

PARKING REQUIRED:
RETAIL (4 PER 1,000 S.F. @ 6,000 S.F.) = 24 STALLS
COFFEE SHOP (6 PER 1,000 S.F. @ 3,500 S.F.) = 21 STALLS
TOTAL REQUIRED = 45 STALLS

PARKING PROVIDED = 68 STALLS (INCL. 3 ADA)

### OPEN SPACE / IMPERVIOUS:

TOTAL LOT AREA = 63,383 S.F.

EXISTING OPEN SPACE = 63,383 S.F.
REQUIRED OPEN SPACE = 12,676 S.F. (20.0%)
PROPOSED OPEN SPACE = 20,382 S.F. (32.2%)

EXISTING IMPERVIOUS = 0 S.F.
PROPOSED IMPERVIOUS = 43,001 S.F. (67.8%)

## FUTURE LOT 2:

(FULL BUILD-OUT)

### PARKING REQUIREMENTS:

PARKING REQUIRED:
RETAIL (4 PER 1,000 S.F. @ 12,600 S.F.) = 51 STALLS
RESTAURANT (15 PER 1,000 S.F. @ 4,200 S.F.) = 63 STALLS
COFFEE SHOP (6 PER 1,000 S.F. @ 1,400 S.F.) = 9 STALLS
TOTAL REQUIRED = 123 STALLS

PARKING PROVIDED = 100 STALLS (INCL. 4 ADA)

### OPEN SPACE / IMPERVIOUS:

TOTAL LOT AREA = 81,649 S.F.

EXISTING OPEN SPACE = 81,649 S.F.
REQUIRED OPEN SPACE = 16,329 S.F. (20.0%)
PROPOSED OPEN SPACE = 16,887 S.F. (20.7%)

EXISTING IMPERVIOUS = 0 S.F.
PROPOSED IMPERVIOUS = 64,762 S.F. (79.3%)

## FUTURE LOT 3:

(FULL BUILD-OUT)

### PARKING REQUIREMENTS:

PARKING REQUIRED:
RESTAURANT (15 PER 1,000 S.F. @ 6,000 S.F.) = 90 STALLS
TOTAL REQUIRED = 90 STALLS

PARKING PROVIDED = 90 STALLS (INCL. 4 ADA)

### OPEN SPACE / IMPERVIOUS:

TOTAL LOT AREA = 59,088 S.F.

EXISTING OPEN SPACE = 59,088 S.F.
REQUIRED OPEN SPACE = 11,817 S.F. (20.0%)
PROPOSED OPEN SPACE = 18,148 S.F. (30.7%)

EXISTING IMPERVIOUS = 0 S.F.
PROPOSED IMPERVIOUS = 40,940 S.F. (69.3%)

## SITE TOTALS:

PARKING REQUIRED = 258 STALLS
PARKING PROVIDED = 258 STALLS

### OPEN SPACE / IMPERVIOUS:

TOTAL LOT AREA = 204,120 S.F.
PROPOSED OPEN SPACE = 55,417 S.F. (27.1%)
PROPOSED IMPERVIOUS = 148,703 S.F. (72.9%)

VICINITY MAP
SCALE: 1" = 2000'

### UTILITY LEGEND:

SANITARY SEWER MANHOLE
STORM SEWER MANHOLE
SAN — SANITARY SEWER
ST — STORM SEWER
G — GAS LINE
W — WATER LINE
U/E — UNDERGROUND ELECTRIC
O/E — OVERHEAD ELECTRIC
TELE — TELEPHONE LINE
CATV — CABLE TV LINE
F/O — FIBER OPTIC LINE
TELEPHONE RISER
TELEPHONE MANHOLE
GROUND LIGHT
LIGHT POLE
POWER POLE
TRANSFORMER POLE
ELECTRIC TRANSFORMER
ELECTRIC METER
CLEAN-OUT
INTAKE
SURFACE INTAKE
TRAFFIC SIGNAL MANHOLE
FIRE HYDRANT
WATER VALVE
GAS METER
DENOTES NUMBER OF PARKING STALLS

### SURVEY LEGEND:

SECTION CORNER- FOUND AS NOTED
PROPERTY CORNER- FOUND AS NOTED
M MEASURED DISTANCE
P PLATTED DISTANCE
D DEEDED DISTANCE
P.R.A. PREVIOUSLY RECORDED AS
R.O.W. RIGHT-OF-WAY
P.O.C. POINT OF COMMENCEMENT
P.O.B. POINT OF BEGINNING

IOWA ONE CALL
1-800-292-8989
www.iowaonecall.com
811 Know what's below. Call before you dig.

### UTILITY NOTE:

THE LOCATION OF THE UTILITIES INDICATED ON THE PLANS ARE TAKEN FROM EXISTING PUBLIC RECORDS AND ARE APPROXIMATE LOCATIONS. THE EXACT LOCATIONS OF ALL UTILITIES MUST BE ASCERTAINED IN THE FIELD. IT SHALL BE THE DUTY OF THE CONTRACTOR TO DETERMINE WHETHER ANY ADDITIONAL FACILITIES OTHER THAN THOSE SHOWN ON THE PLANS MAY BE PRESENT.


COPYRIGHT 2013 BISHOP ENGINEERING. THIS DOCUMENT AND THE INFORMATION CONTAINED MAY NOT BE REPRODUCED OR EXCERPTED FROM WITHOUT THE EXPRESS WRITTEN PERMISSION OF BISHOP ENGINEERING. UNAUTHORIZED COPYING OR DISCLOSURE OF CONSTRUCTION USE ARE PROHIBITED BY THE COPYRIGHT LAW.


LICENSED PROFESSIONAL ENGINEER
CHARLES J. BISHOP
11055
IOWA

I HEREBY CERTIFY THAT THIS ENGINEERING DOCUMENT WAS PREPARED BY ME OR UNDER MY DIRECT PERSONAL SUPERVISION AND THAT I AM A DULY LICENSED PROFESSIONAL ENGINEER UNDER THE LAWS OF THE STATE OF IOWA.

SIGNED:_____ DATE:_____
CHARLES J. BISHOP, P.E. 11055
LICENSE RENEWAL DATE: DEC. 31, 2014
PAGES OR SHEETS COVERED BY THIS SEAL: _____


Bishop Engineering
"Planning Your Successful Development"
3501 104th Street
Des Moines, Iowa 50322-3825
Phone: (515)276-0467 Fax: (515)276-0217
Civil Engineering & Land Surveying
Established 1959


THE SHOPPES AT WILLIAMS POINTE
SITE IMPROVEMENT PLAN
COVER SHEET

REFERENCE NUMBER:

DRAWN BY: EWM

CHECKED BY: CJB

REVISION DATE:
06-17-13 CITY SUBMITTAL
07-09-13 CITY SUBMITTAL
07-19-13 CITY SUBMITTAL

PROJECT NUMBER: 130129

SHEET NUMBER: C0.1

M:\Land Projects 2013\130129\dwg\C0 COVER.dwg 4/29/2013 2:54:35 PM CDT

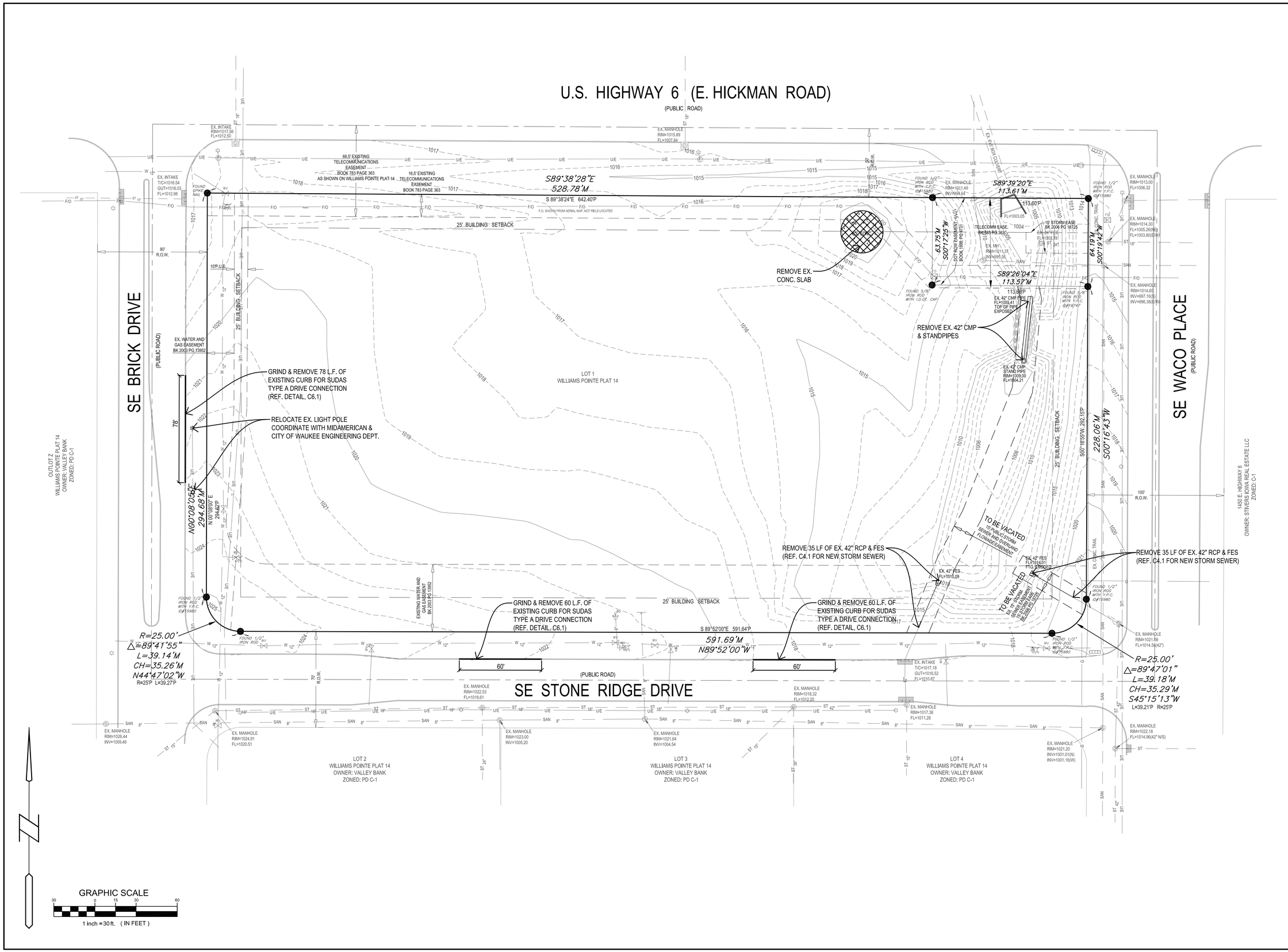



**Bishop Engineering**
"Planning Your Successful Development"
3501 104th Street
Des Moines, Iowa 50322-3825
Phone: (515)276-0467 Fax: (515)276-0217
Civil Engineering & Land Surveying Established 1959


# THE SHOPPES AT WILLIAMS POINTE
## SITE IMPROVEMENT PLAN
## DEMO PLAN

REFERENCE NUMBER:

DRAWN BY: EWM

CHECKED BY: CJB

REVISION DATE:
06-17-13 CITY SUBMITTAL
07-09-13 CITY SUBMITTAL
07-19-13 CITY SUBMITTAL

PROJECT NUMBER: 130129

SHEET NUMBER: C1.1

M:\Land Projects 2013\130129\dwg\C1 DEMO.dwg 4/29/2013 3:41:30 PM CDT

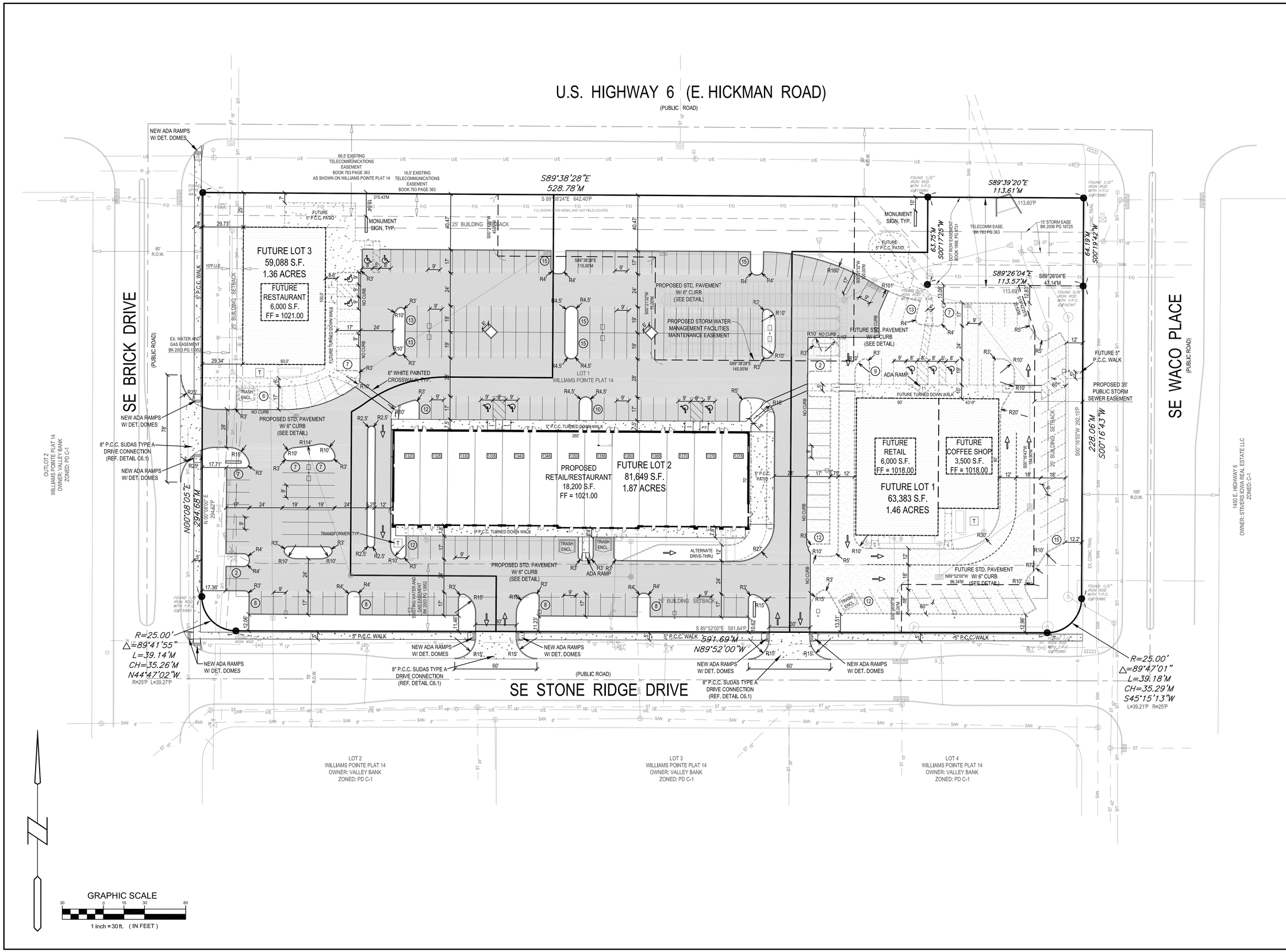



Bishop Engineering
"Planning Your Successful Development"
3501 104th Street
Des Moines, Iowa 50322-3825
Phone: (515)276-0467 Fax: (515)276-0217
Civil Engineering & Land Surveying Established 1959


# THE SHOPPES AT WILLIAMS POINTE
## SITE IMPROVEMENT PLAN
## LAYOUT PLAN

REFERENCE NUMBER:

DRAWN BY: EWM

CHECKED BY: CJB

REVISION DATE:
06-17-13 CITY SUBMITTAL
07-09-13 CITY SUBMITTAL
07-19-13 CITY SUBMITTAL

PROJECT NUMBER: 130129

SHEET NUMBER: C2.1

M:\Land Projects 2013\130129\dwg\C2 LAYOUT.dwg 4/29/2013 3:46:27 PM CDT

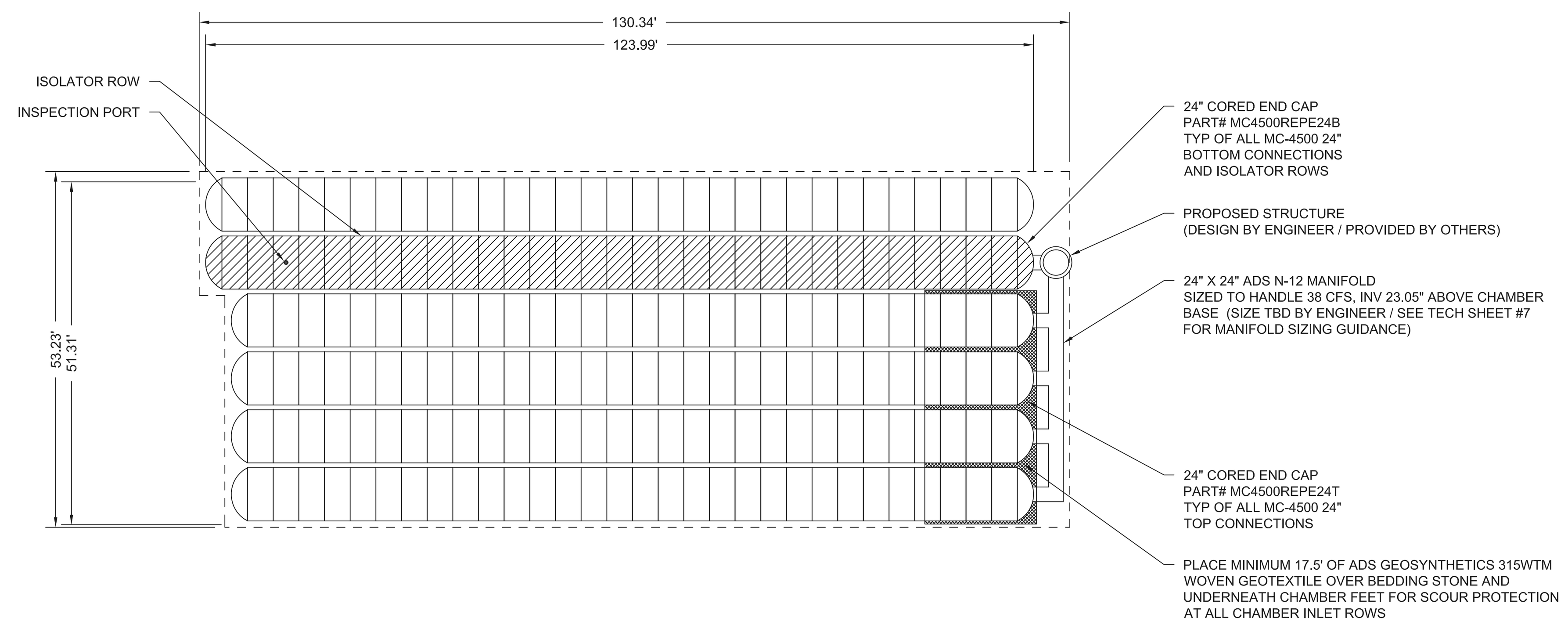


## PROPOSED LAYOUT

(182) STORMTECH MC-4500 CHAMBERS
(12) STORMTECH MC-4500 END CAPS
INSTALLED WITH 12" COVER STONE, 9" BASE STONE, 40% STONE VOID
**INSTALLED SYSTEM VOLUME: 32,051 CF (PERIMETER STONE INCLUDED)**
AREA OF SYSTEM: 7,468 FT²
PERIMETER OF SYSTEM: 384 FT

## PROPOSED ELEVATIONS

| | |
|---|---|
| MAXIMUM GRADE (TOP OF PAVEMENT/UNPAVED): | 1021.00 |
| MINIMUM GRADE (UNPAVED WITH TRAFFIC): | 1016.50 |
| MINIMUM GRADE (UNPAVED NO TRAFFIC): | 1016.00 |
| MINIMUM GRADE (BASE OF FLEXIBLE PAVEMENT) | 1016.00 |
| MINIMUM GRADE (TOP OF REINFORCED CONCRETE PAVEMENT): | 1016.00 |
| TOP OF STONE: | 1015.00 |
| TOP OF CHAMBER: | 1014.00 |
| 24" TOP FEEDING MANIFOLD INVERT: | 1010.92 |
| 24" ISOLATOR ROW INVERT : | 1009.19 |
| BOTTOM OF CHAMBER: | 1009.00 |
| UNDERDRAIN INVERT: | 1008.25 |
| BOTTOM OF STONE: | 1008.25 |

WILLIAMS POINTE
WAUKEE - IOWA
DATE: 6-3-13 | DRAWN: SKR
PROJECT #: 37778 | CHECKED:
REV | DRW | CHK | DESCRIPTION
StormTech® Detention · Retention · Water Quality
70 INWOOD ROAD, SUITE 3 | ROCKY HILL | CT | 06067
860-529-8188 | 888-892-2694 | WWW.STORMTECH.COM
ADS ADVANCED DRAINAGE SYSTEMS, INC.
4640 TRUEMAN BLVD
HILLIARD, OH 43026
1-800-733-7473
0 20' 40'
THIS DRAWING HAS BEEN PREPARED BASED ON INFORMATION PROVIDED TO ADS UNDER THE DIRECTION OF THE SITE DESIGN ENGINEER OR OTHER PROJECT REPRESENTATIVE. THE SITE DESIGN ENGINEER SHALL REVIEW THIS DRAWING PRIOR TO CONSTRUCTION. IT IS THE ULTIMATE RESPONSIBILITY OF THE SITE DESIGN ENGINEER TO ENSURE THAT THE PRODUCT(S) DEPICTED AND ALL ASSOCIATED DETAILS MEET ALL APPLICABLE LAWS, REGULATIONS, AND PROJECT REQUIREMENTS.
SHEET
2 OF 5

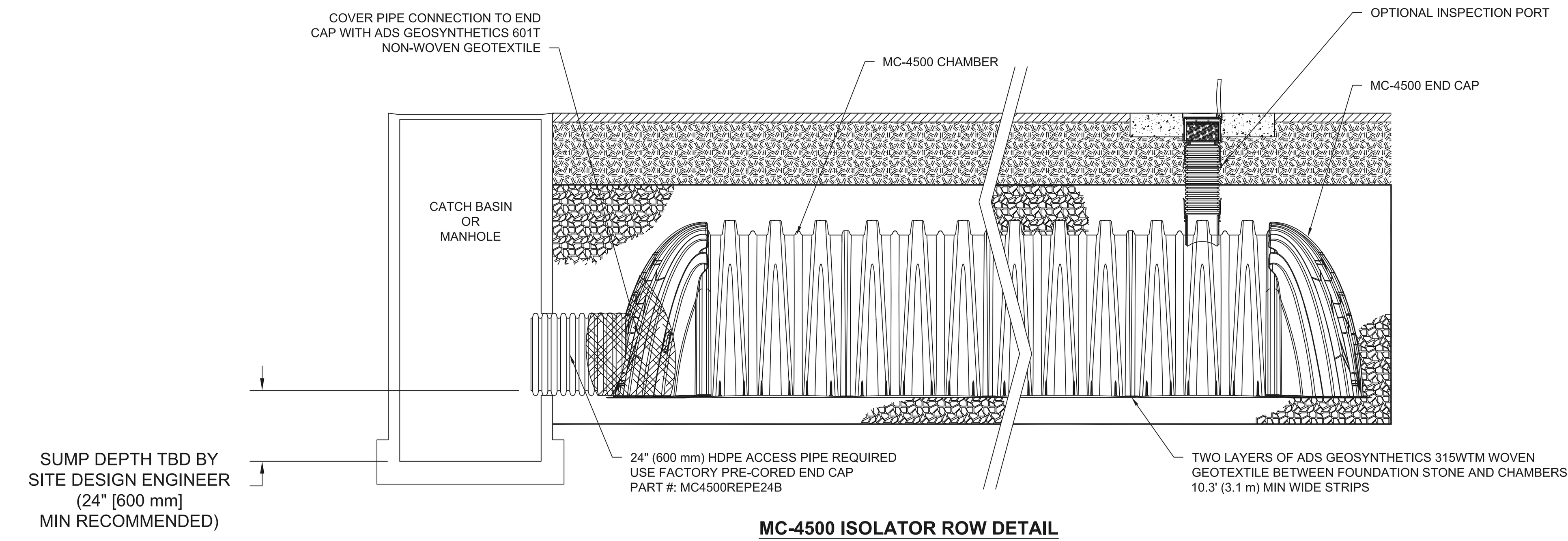


**MC-4500 ISOLATOR ROW DETAIL**
NTS

## INSPECTION & MAINTENANCE

STEP 1) INSPECT ISOLATOR ROW FOR SEDIMENT
- A. INSPECTION PORTS (IF PRESENT)
  - A.1. REMOVE/OPEN LID ON NYLOPLAST INLINE DRAIN
  - A.2. REMOVE AND CLEAN FLEXSTORM FILTER IF INSTALLED
  - A.3. USING A FLASHLIGHT AND STADIA ROD, MEASURE DEPTH OF SEDIMENT AND RECORD ON MAINTENANCE LOG
  - A.4. LOWER A CAMERA INTO ISOLATOR ROW FOR VISUAL INSPECTION OF SEDIMENT LEVELS (OPTIONAL)
  - A.5. IF SEDIMENT IS AT, OR ABOVE, 3" (80 mm) PROCEED TO STEP 2. IF NOT, PROCEED TO STEP 3.
- B. ALL ISOLATOR ROWS
  - B.1. REMOVE COVER FROM STRUCTURE AT UPSTREAM END OF ISOLATOR ROW
  - B.2. USING A FLASHLIGHT, INSPECT DOWN THE ISOLATOR ROW THROUGH OUTLET PIPE
    - i) MIRRORS ON POLES OR CAMERAS MAY BE USED TO AVOID A CONFINED SPACE ENTRY
    - ii) FOLLOW OSHA REGULATIONS FOR CONFINED SPACE ENTRY IF ENTERING MANHOLE
  - B.3. IF SEDIMENT IS AT, OR ABOVE, 3" (80 mm) PROCEED TO STEP 2. IF NOT, PROCEED TO STEP 3.

STEP 2) CLEAN OUT ISOLATOR ROW USING THE JETVAC PROCESS
- A. A FIXED CULVERT CLEANING NOZZLE WITH REAR FACING SPREAD OF 45" (1.1 m) OR MORE IS PREFERRED
- B. APPLY MULTIPLE PASSES OF JETVAC UNTIL BACKFLUSH WATER IS CLEAN
- C. VACUUM STRUCTURE SUMP AS REQUIRED

STEP 3) REPLACE ALL COVERS, GRATES, FILTERS, AND LIDS; RECORD OBSERVATIONS AND ACTIONS.

STEP 4) INSPECT AND CLEAN BASINS AND MANHOLES UPSTREAM OF THE STORMTECH SYSTEM.

## NOTES

1. INSPECT EVERY 6 MONTHS DURING THE FIRST YEAR OF OPERATION. ADJUST THE INSPECTION INTERVAL BASED ON PREVIOUS OBSERVATIONS OF SEDIMENT ACCUMULATION AND HIGH WATER ELEVATIONS.
2. CONDUCT JETTING AND VACTORING ANNUALLY OR WHEN INSPECTION SHOWS THAT MAINTENANCE IS NECESSARY.

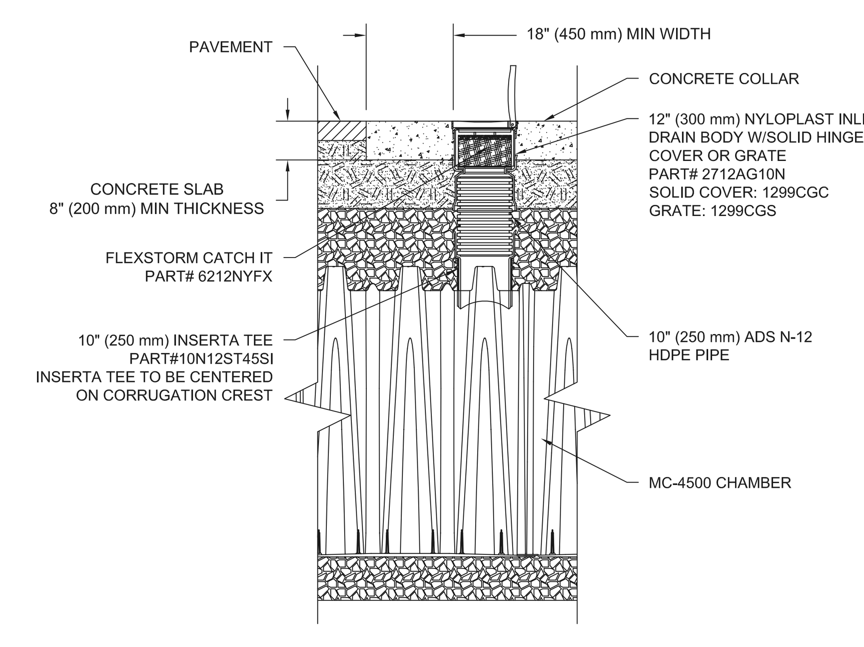


**MC-4500 INSPECTION PORT DETAIL**
NTS


WILLIAMS POINTE
WAUKEE - IOWA
DATE: 6-3-13 | DRAWN: SKR
PROJECT #: 37778 | CHECKED:
REV | DRW | CHK | DESCRIPTION
StormTech® Detention · Retention · Water Quality
70 INWOOD ROAD, SUITE 3 | ROCKY HILL | CT | 06067
860-529-8188 | 888-892-2694 | WWW.STORMTECH.COM
ADS ADVANCED DRAINAGE SYSTEMS, INC.
4640 TRUEMAN BLVD
HILLIARD, OH 43026
1-800-733-7473
THIS DRAWING HAS BEEN PREPARED BASED ON INFORMATION PROVIDED TO ADS UNDER THE DIRECTION OF THE SITE DESIGN ENGINEER OR OTHER PROJECT REPRESENTATIVE. THE SITE DESIGN ENGINEER SHALL REVIEW THIS DRAWING PRIOR TO CONSTRUCTION. IT IS THE ULTIMATE RESPONSIBILITY OF THE SITE DESIGN ENGINEER TO ENSURE THAT THE PRODUCT(S) DEPICTED AND ALL ASSOCIATED DETAILS MEET ALL APPLICABLE LAWS, REGULATIONS, AND PROJECT REQUIREMENTS.

SHEET
3 OF 5

INTENTIONALLY
LEFT BLANK

**UNDERDRAIN DETAIL**
NTS

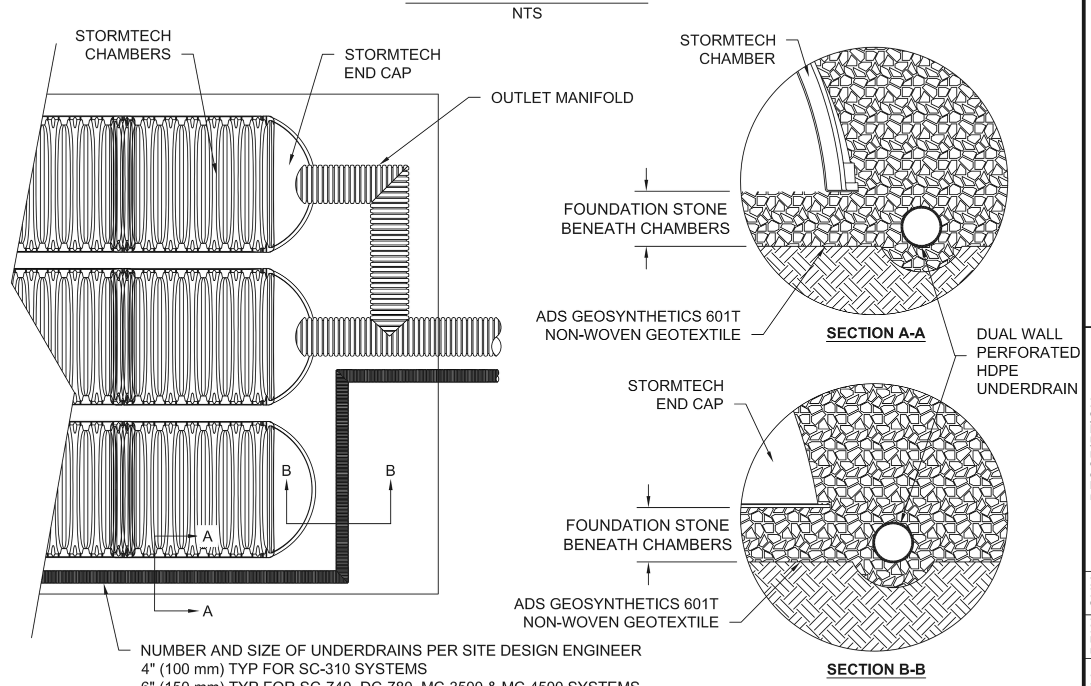


**MC-SERIES END CAP INSERTION DETAIL**
NTS

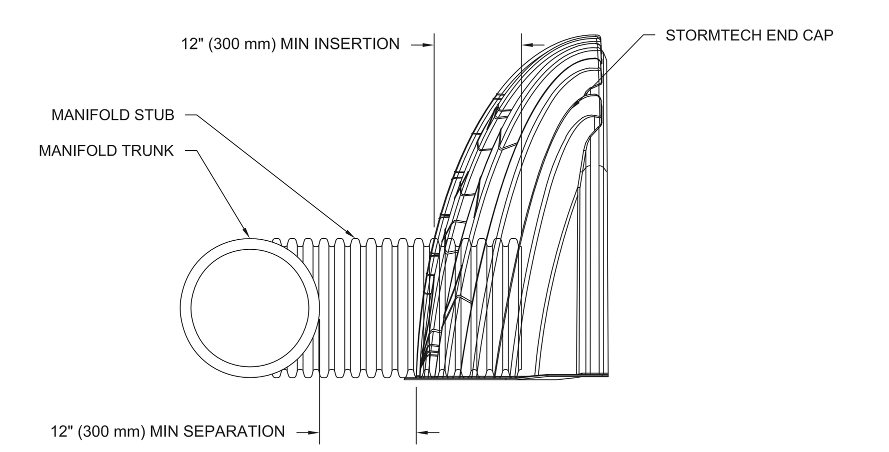


NOTE: MANIFOLD STUB MUST BE LAID HORIZONTAL
FOR A PROPER FIT IN END CAP OPENING.


WILLIAMS POINTE
WAUKEE - IOWA
DATE: 6-3-13 | DRAWN: SKR
PROJECT #: 37778 | CHECKED:
REV | DRW | CHK | DESCRIPTION
StormTech® Detention · Retention · Water Quality
70 INWOOD ROAD, SUITE 3 | ROCKY HILL | CT | 06067
860-529-8188 | 888-892-2694 | WWW.STORMTECH.COM
ADS ADVANCED DRAINAGE SYSTEMS, INC.
4640 TRUEMAN BLVD
HILLIARD, OH 43026
1-800-733-7473
THIS DRAWING HAS BEEN PREPARED BASED ON INFORMATION PROVIDED TO ADS UNDER THE DIRECTION OF THE SITE DESIGN ENGINEER OR OTHER PROJECT REPRESENTATIVE. THE SITE DESIGN ENGINEER SHALL REVIEW THIS DRAWING PRIOR TO CONSTRUCTION. IT IS THE ULTIMATE RESPONSIBILITY OF THE SITE DESIGN ENGINEER TO ENSURE THAT THE PRODUCT(S) DEPICTED AND ALL ASSOCIATED DETAILS MEET ALL APPLICABLE LAWS, REGULATIONS, AND PROJECT REQUIREMENTS.

SHEET
4 OF 5

## ACCEPTABLE FILL MATERIALS: STORMTECH MC-4500 CHAMBER SYSTEMS

| | MATERIAL LOCATION | DESCRIPTION | AASHTO MATERIAL CLASSIFICATIONS | COMPACTION / DENSITY REQUIREMENT |
|---|---|---|---|---|
| D | **FINAL FILL:** FILL MATERIAL FOR LAYER 'D' STARTS FROM THE TOP OF THE 'C' LAYER TO THE BOTTOM OF FLEXIBLE PAVEMENT OR UNPAVED FINISHED GRADE ABOVE. NOTE THAT PAVEMENT SUBBASE MAY BE PART OF THE 'D' LAYER | ANY SOIL/ROCK MATERIALS, NATIVE SOILS, OR PER ENGINEER'S PLANS. CHECK PLANS FOR PAVEMENT SUBGRADE REQUIREMENTS. | N/A | PREPARE PER SITE DESIGN ENGINEER'S PLANS. PAVED INSTALLATIONS MAY HAVE STRINGENT MATERIAL AND PREPARATION REQUIREMENTS. |
| C | **INITIAL FILL:** FILL MATERIAL FOR LAYER 'C' STARTS FROM THE TOP OF THE EMBEDMENT STONE ('B' LAYER) TO 24" (600 mm) ABOVE THE TOP OF THE CHAMBER. NOTE THAT PAVEMENT SUBBASE MAY BE A PART OF THE 'C' LAYER. | GRANULAR WELL-GRADED SOIL/AGGREGATE MIXTURES, <35% FINES OR PROCESSED AGGREGATE. MOST PAVEMENT SUBBASE MATERIALS CAN BE USED IN LIEU OF THIS LAYER. | AASHTO M145[1] A-1, A-2-4, A-3 OR AASHTO M43[1] 3, 357, 4, 467, 5, 56, 57, 6, 67, 68, 7, 78, 8, 89, 9, 10 | BEGIN COMPACTIONS AFTER 24" (600 mm) OF MATERIAL OVER THE CHAMBERS IS REACHED. COMPACT ADDITIONAL LAYERS IN 12" (300 mm) MAX LIFTS TO A MIN. 95% PROCTOR DENSITY FOR WELL GRADED MATERIAL AND 95% RELATIVE DENSITY FOR PROCESSED AGGREGATE MATERIALS. |
| B | **EMBEDMENT STONE:** FILL SURROUNDING THE CHAMBERS FROM THE FOUNDATION STONE ('A' LAYER) TO THE 'C' LAYER ABOVE. | CLEAN, CRUSHED, ANGULAR STONE, NOMINAL SIZE DISTRIBUTION BETWEEN 3/4-2 INCH (20-50 mm) | AASHTO M43[1] 3, 4 | NO COMPACTION REQUIRED. |
| A | **FOUNDATION STONE:** FILL BELOW CHAMBERS FROM THE SUBGRADE UP TO THE FOOT (BOTTOM) OF THE CHAMBER. | CLEAN, CRUSHED, ANGULAR STONE, NOMINAL SIZE DISTRIBUTION BETWEEN 3/4-2 INCH (20-50 mm) | AASHTO M43[1] 3, 4 | PLATE COMPACT OR ROLL TO ACHIEVE A FLAT SURFACE. [2,3] |

PLEASE NOTE:
1. THE LISTED AASHTO DESIGNATIONS ARE FOR GRADATIONS ONLY. THE STONE MUST ALSO BE CLEAN, CRUSHED, ANGULAR. FOR EXAMPLE, A SPECIFICATION FOR #4 STONE WOULD STATE: "CLEAN, CRUSHED, ANGULAR NO. 4 (AASHTO M43) STONE".
2. STORMTECH COMPACTION REQUIREMENTS ARE MET FOR 'A' LOCATION MATERIALS WHEN PLACED AND COMPACTED IN 9" (230 mm) (MAX) LIFTS USING TWO FULL COVERAGES WITH A VIBRATORY COMPACTOR.
3. WHERE INFILTRATION SURFACES MAY BE COMPROMISED BY COMPACTION, FOR STANDARD DESIGN LOAD CONDITIONS, A FLAT SURFACE MAY BE ACHIEVED BY RAKING OR DRAGGING WITHOUT COMPACTION EQUIPMENT. FOR SPECIAL LOAD DESIGNS, CONTACT STORMTECH FOR COMPACTION REQUIREMENTS.

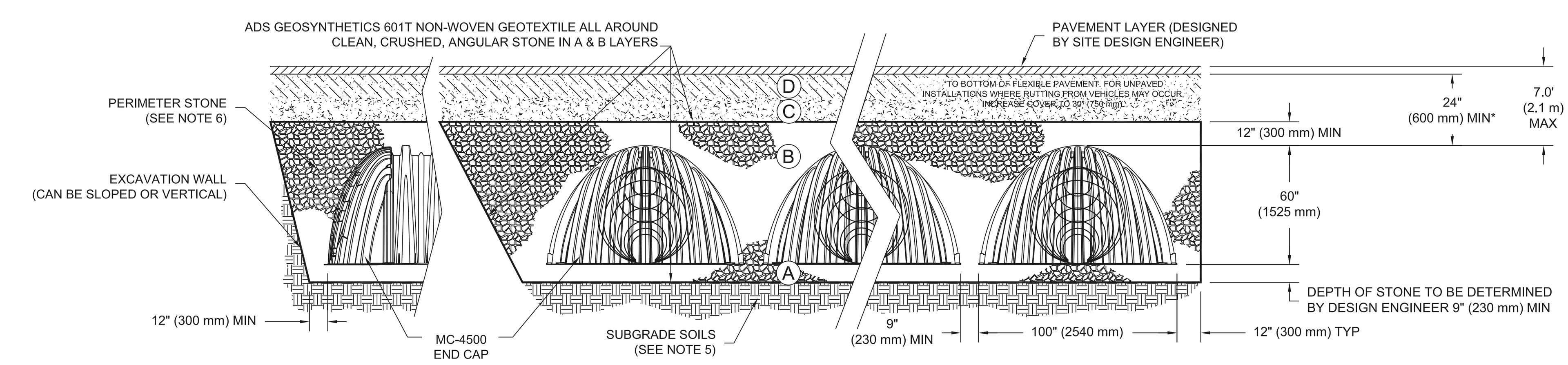


## NOTES:

1. MC-4500 CHAMBERS SHALL CONFORM TO THE REQUIREMENTS OF ASTM F2418 "STANDARD SPECIFICATION FOR POLYPROPYLENE (PP) CORRUGATED WALL STORMWATER COLLECTION CHAMBERS".
2. MC-4500 CHAMBERS SHALL BE DESIGNED IN ACCORDANCE WITH ASTM F2787 "STANDARD PRACTICE FOR STRUCTURAL DESIGN OF THERMOPLASTIC CORRUGATED WALL STORMWATER COLLECTION CHAMBERS".
3. "ACCEPTABLE FILL MATERIALS" TABLE ABOVE PROVIDES MATERIAL LOCATIONS, DESCRIPTIONS, GRADATIONS, AND COMPACTION REQUIREMENTS FOR FOUNDATION, EMBEDMENT, AND FILL MATERIALS.
4. THE "SITE DESIGN ENGINEER" REFERS TO THE ENGINEER RESPONSIBLE FOR THE DESIGN AND LAYOUT OF THE STORMTECH CHAMBERS FOR THIS PROJECT.
5. THE SITE DESIGN ENGINEER IS RESPONSIBLE FOR ASSESSING THE BEARING RESISTANCE (ALLOWABLE BEARING CAPACITY) OF THE SUBGRADE SOILS AND THE DEPTH OF FOUNDATION STONE WITH CONSIDERATION FOR THE RANGE OF EXPECTED SOIL MOISTURE CONDITIONS.
6. PERIMETER STONE MUST BE EXTENDED HORIZONTALLY TO THE EXCAVATION WALL FOR BOTH VERTICAL AND SLOPED EXCAVATION WALLS.
7. ONCE LAYER 'C' IS PLACED, ANY SOIL/MATERIAL CAN BE PLACED IN LAYER 'D' UP TO THE FINISHED GRADE. MOST PAVEMENT SUBBASE SOILS CAN BE USED TO REPLACE THE MATERIAL REQUIREMENTS OF LAYER 'C' OR 'D' AT THE SITE DESIGN ENGINEER'S DISCRETION.


WILLIAMS POINTE
WAUKEE - IOWA
DATE: 6-3-13 | DRAWN: SKR
PROJECT #: 37778 | CHECKED:
REV | DRW | CHK | DESCRIPTION
StormTech® Detention · Retention · Water Quality
70 INWOOD ROAD, SUITE 3 | ROCKY HILL | CT | 06067
860-529-8188 | 888-892-2694 | WWW.STORMTECH.COM
ADS ADVANCED DRAINAGE SYSTEMS, INC.
4640 TRUEMAN BLVD
HILLIARD, OH 43026
1-800-733-7473
THIS DRAWING HAS BEEN PREPARED BASED ON INFORMATION PROVIDED TO ADS UNDER THE DIRECTION OF THE SITE DESIGN ENGINEER OR OTHER PROJECT REPRESENTATIVE. THE SITE DESIGN ENGINEER SHALL REVIEW THIS DRAWING PRIOR TO CONSTRUCTION. IT IS THE ULTIMATE RESPONSIBILITY OF THE SITE DESIGN ENGINEER TO ENSURE THAT THE PRODUCT(S) DEPICTED AND ALL ASSOCIATED DETAILS MEET ALL APPLICABLE LAWS, REGULATIONS, AND PROJECT REQUIREMENTS.

SHEET
5 OF 5

ADVANCED DRAINAGE SYSTEMS, INC.

| PROJECT INFORMATION | |
|---|---|
| ENGINEERED PRODUCT MANAGER: | REX OLLENBURG (515) 257-0092 REX.OLLENBURG@ADS-PIPE.COM |
| ADS SALES REP: | PAUL HUTTON (515) 975-3545 PAUL.HUTTON@ADS-PIPE.COM |
| PROJECT NO: | 37778 |

CONTACT STORMTECH AT 1-888-892-2694 WITH ANY QUESTIONS ON INSTALLATION REQUIREMENTS OR WEIGHT LIMITS FOR CONSTRUCTION EQUIPMENT.

## STORMWATER CHAMBER SPECIFICATIONS

1. CHAMBERS SHALL BE STORMTECH MC-4500 OR APPROVED EQUAL.
2. CHAMBERS SHALL BE MANUFACTURED FROM VIRGIN, IMPACT-MODIFIED POLYPROPYLENE COPOLYMERS.
3. CHAMBER ROWS SHALL PROVIDE CONTINUOUS, UNOBSTRUCTED INTERNAL SPACE WITH NO INTERNAL SUPPORT PANELS THAT WOULD IMPEDE FLOW OR LIMIT ACCESS FOR INSPECTION.
4. THE STRUCTURAL DESIGN OF THE CHAMBERS, THE STRUCTURAL BACKFILL, AND THE INSTALLATION REQUIREMENTS SHALL ENSURE THAT THE LOAD FACTORS SPECIFIED IN THE AASHTO LRFD BRIDGE DESIGN SPECIFICATIONS, SECTION 12.12, ARE MET FOR: 1) LONG-DURATION DEAD LOADS AND 2) SHORT-DURATION LIVE LOADS, BASED ON THE AASHTO DESIGN TRUCK WITH CONSIDERATION FOR IMPACT AND MULTIPLE VEHICLE PRESENCES.
5. CHAMBERS SHALL MEET THE REQUIREMENTS OF ASTM F2418, "STANDARD SPECIFICATION FOR POLYPROPYLENE (PP) CORRUGATED WALL STORMWATER COLLECTION CHAMBERS".
6. CHAMBERS SHALL BE DESIGNED AND ALLOWABLE LOADS DETERMINED IN ACCORDANCE WITH ASTM F2787, "STANDARD PRACTICE FOR STRUCTURAL DESIGN OF THERMOPLASTIC CORRUGATED WALL STORMWATER COLLECTION CHAMBERS".
7. ONLY CHAMBERS THAT ARE APPROVED BY THE SITE DESIGN ENGINEER WILL BE ALLOWED. THE CHAMBER MANUFACTURER SHALL SUBMIT THE FOLLOWING UPON REQUEST TO THE SITE DESIGN ENGINEER FOR APPROVAL BEFORE DELIVERING CHAMBERS TO THE PROJECT SITE:
   - a. A STRUCTURAL EVALUATION SEALED BY A REGISTERED PROFESSIONAL ENGINEER THAT DEMONSTRATES THAT THE SAFETY FACTORS ARE GREATER THAN OR EQUAL TO 1.95 FOR DEAD LOAD AND 1.75 FOR LIVE LOAD, THE MINIMUM REQUIRED BY ASTM F2787 AND BY AASHTO FOR THERMOPLASTIC PIPE.
   - b. A STRUCTURAL EVALUATION SEALED BY A REGISTERED PROFESSIONAL ENGINEER THAT DEMONSTRATES THAT THE LOAD FACTORS SPECIFIED IN THE AASHTO LRFD BRIDGE DESIGN SPECIFICATIONS, SECTION 12.12, ARE MET. THE 50 YEAR CREEP MODULUS DATA SPECIFIED IN ASTM F2418 MUST BE USED AS PART OF THE AASHTO STRUCTURAL EVALUATION TO VERIFY LONG-TERM PERFORMANCE.
   - c. STRUCTURAL CROSS SECTION DETAIL ON WHICH THE STRUCTURAL EVALUATION IS BASED.
8. CHAMBERS AND END CAPS SHALL BE PRODUCED AT AN ISO 9001 CERTIFIED MANUFACTURING FACILITY.

## IMPORTANT - NOTES FOR THE BIDDING AND INSTALLATION OF MC-4500 CHAMBER SYSTEM

1. STORMTECH MC-4500 CHAMBERS SHALL NOT BE INSTALLED UNTIL THE MANUFACTURER'S REPRESENTITIVE HAS COMPLETED A PRE-CONSTRUCTION MEETING WITH THE INSTALLERS.
2. STORMTECH MC-4500 CHAMBERS SHALL BE INSTALLED IN ACCORDANCE WITH THE "STORMTECH MC-3500/MC-4500 CONSTRUCTION GUIDE".
3. CHAMBERS ARE NOT TO BE BACKFILLED WITH A DOZER OR EXCAVATOR SITUATED OVER THE CHAMBERS.

   STORMTECH RECOMMENDS 3 BACKFILL METHODS:
   - STONESHOOTER LOCATED OFF THE CHAMBER BED.
   - BACKFILL AS ROWS ARE BUILT USING AN EXCAVATOR ON THE FOUNDATION STONE OR SUBGRADE.
   - BACKFILL FROM OUTSIDE THE EXCAVATION USING A LONG BOOM HOE OR EXCAVATOR.
4. THE FOUNDATION STONE SHALL BE LEVELED AND COMPACTED PRIOR TO PLACING CHAMBERS.
5. JOINTS BETWEEN CHAMBERS SHALL BE PROPERLY SEATED PRIOR TO PLACING STONE. INSTALL (6) SCREWS (FASTENAL #12-11X1") AT EACH JOINT AS SHOWN IN THE "MC-3500/MC-4500 CONSTRUCTION GUIDE"; (3) SCREWS ON EACH SIDE OF THE JOINT.
6. MAINTAIN MINIMUM - 9" (230 mm) SPACING BETWEEN THE CHAMBER ROWS.
7. INLET AND OUTLET MANIFOLDS MUST BE INSERTED A MINIMUM OF 12" (300 mm) INTO CHAMBER END CAPS.
8. EMBEDMENT STONE SURROUNDING CHAMBERS MUST BE A CLEAN, CRUSHED, ANGULAR STONE 3/4-2" (20-50 mm) MEETING THE AASHTO M43 DESIGNATION OF #3 OR #4.
9. STONE SHALL BE BROUGHT UP EVENLY AROUND CHAMBERS SO AS NOT TO DISTORT THE CHAMBER SHAPE. STONE DEPTHS SHOULD NEVER DIFFER BY MORE THAN 12" (300 mm) BETWEEN ADJACENT CHAMBER ROWS.
10. STONE MUST BE PLACED ON THE TOP CENTER OF THE CHAMBER TO ANCHOR THE CHAMBERS IN PLACE AND PRESERVE ROW SPACING.
11. ADS RECOMMENDS THE USE OF "FLEXSTORM CATCH IT" INSERTS DURING CONSTRUCTION FOR ALL INLETS TO PROTECT THE SUBSURFACE STORMWATER MANAGEMENT SYSTEM FROM CONSTRUCTION SITE RUNOFF.

### NOTES FOR CONSTRUCTION EQUIPMENT

1. STORMTECH MC-4500 CHAMBERS SHALL BE INSTALLED IN ACCORDANCE WITH THE "STORMTECH MC-3500/MC-4500 CONSTRUCTION GUIDE".
2. THE USE OF EQUIPMENT OVER MC-4500 CHAMBERS IS LIMITED:
   - NO EQUIPMENT IS ALLOWED ON BARE CHAMBERS.
   - NO RUBBER TIRED LOADER, DUMP TRUCK, OR EXCAVATORS ARE ALLOWED UNTIL PROPER FILL DEPTHS ARE REACHED IN ACCORDANCE WITH THE "STORMTECH MC-3500/MC-4500 CONSTRUCTION GUIDE".
   - WEIGHT LIMITS FOR CONSRUCTION EQUIPMENT CAN BE FOUND IN THE "STORMTECH MC-3500/MC-4500 CONSTRUCTION GUIDE".
3. FULL 36" (900 mm) OF STABILIZED COVER MATERIALS OVER THE CHAMBERS IS REQUIRED FOR DUMP TRUCK TRAVEL OR DUMPING.

USE OF A DOZER TO PUSH EMBEDMENT STONE BETWEEN THE ROWS OF CHAMBERS MAY CAUSE DAMAGE TO CHAMBERS AND IS NOT AN ACCEPTABLE BACKFILL METHOD. ANY CHAMBERS DAMAGED BY USING THE "DUMP AND PUSH" METHOD ARE NOT COVERED UNDER THE STORMTECH STANDARD WARRANTY.


Bishop Engineering
"Planning Your Successful Development"
3501 104th Street
Des Moines, Iowa 50322-3825
Phone: (515)276-0467 Fax: (515)276-0217
Civil Engineering & Land Surveying Established 1959


# THE SHOPPES AT WILLIAMS POINTE
## SITE IMPROVEMENT PLAN
# STORMTECH DETAILS

REFERENCE NUMBER:

DRAWN BY:
EWM

CHECKED BY:
CJB

REVISION DATE:
06-17-13 CITY SUBMITTAL
07-09-13 CITY SUBMITTAL
07-19-13 CITY SUBMITTAL

PROJECT NUMBER:
130129

SHEET NUMBER:
C6.3

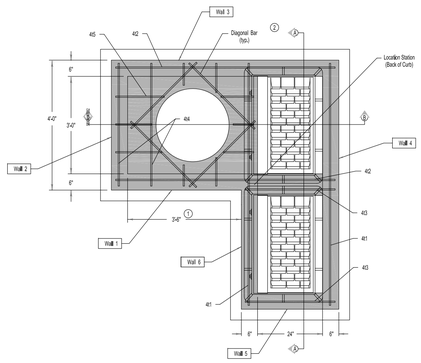


PLAN

1. 36 inch pipe may be used when wall dimension is increased to 4 feet.
2. Install four #4 diagonal bars at manhole opening and at all pipe openings.

| MAXIMUM PIPE DIAMETERS | |
|---|---|
| Wall | Max. Dia. |
| 1 | 30" (1) |
| 2 | 24" |
| 3 | 36" |
| 4 | 48" |

SUDAS — Iowa Department of Transportation — SCALE: NEW / DN-2-00

FIGURE 6010.506 — STANDARD ROAD PLAN — SW-506 — SHEET 1 of 2

REVISIONS: New Replaces SUDAS Type "A4" Intake.

SUDAS DIRECTOR — DESIGN METHODS ENGINEER

DOUBLE GRATE INTAKE WITH MANHOLE

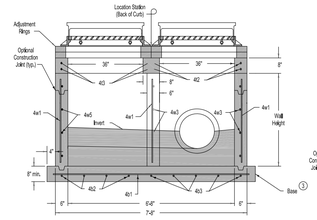


SECTION A-A

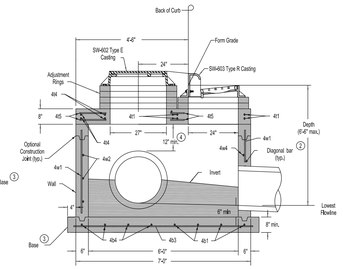


SECTION B-B

| REINFORCING BAR LIST | | | | | | |
|---|---|---|---|---|---|---|
| Mark | Size | Location | Shape | Count | Length | Spacing |
| 4t1 | 4 | Top | ——— | 4 | 7'-4" | See Detail |
| 4t2 | 4 | Top | ——— | 4 | 6'-8" | See Detail |
| 4t3 | 4 | Top | ——— | 4 | 2'-6" | See Detail |
| 4t4 | 4 | Top | ——— | 8 | 3'-8" | 12" |
| 4t5 | 4 | Top | ——— | 6 | 4'-2" | 12" |
| 4b1 | 4 | Base | ——— | 4 | 7'-10" | 12" |
| 4b2 | 4 | Base | ——— | 4 | 3'-2" | 12" |
| 4b3 | 4 | Base | ——— | 5 | 7'-2" | 12" |
| 4b4 | 4 | Base | ——— | 4 | 4'-2" | 12" |
| 4w1 | 4 | Walls | ——— | 29 | Wall Height minus 4" | 12" |
| 4w2 | 4 | Wall 2 | ——— | Varies | 3'-8" | 12" |
| 4w3 | 4 | Walls 1 and 3 | ——— | Varies | 6'-8" | 12" |
| 4w4 | 4 | Wall 4 | ——— | Varies | 7'-4" | 12" |
| 4w5 | 4 | Wall 5 | ——— | Varies | 2'-8" | 12" |
| 4w6 | 4 | Wall 6 | ——— | Varies | 7'-10" | 12" |

2. Install four #4 diagonal bars at manhole opening and at all pipe openings.
3. Cast-in-place base shown. If base is precast integral with walls, the footprint of base is not required to extend beyond the outer edge of the walls.
4. 12 inch minimum wall height above all pipes.

SUDAS — Iowa Department of Transportation — SCALE: NEW / DN-2-00

FIGURE 6010.506 — STANDARD ROAD PLAN — SW-506 — SHEET 2 of 2

REVISIONS: New Replaces SUDAS Type "A4" Intake.

SUDAS DIRECTOR — DESIGN METHODS ENGINEER

DOUBLE GRATE INTAKE WITH MANHOLE

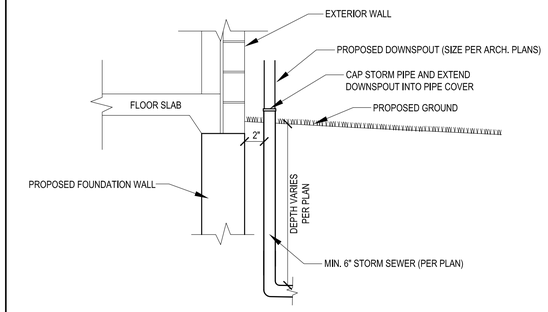


**DOWNSPOUT CONNECTION DETAIL**

NOT TO SCALE


Bishop Engineering
"Planning Your Successful Development"
3501 104th Street
Des Moines, Iowa 50322-3825
Phone: (515)276-0467 Fax: (515)276-0217
Civil Engineering & Land Surveying Established 1959


# THE SHOPPES AT WILLIAMS POINTE
## SITE IMPROVEMENT PLAN

## DETAILS SHEET

REFERENCE NUMBER:

DRAWN BY: EWM

CHECKED BY: CJB

REVISION DATE:
06-17-13 CITY SUBMITTAL
07-09-13 CITY SUBMITTAL
07-19-13 CITY SUBMITTAL

PROJECT NUMBER: 130129

SHEET NUMBER: C6.2

M:\Land Projects 2013\130129\dwg\C0 COVER.dwg 4/29/2013 2:54:35 PM CDT

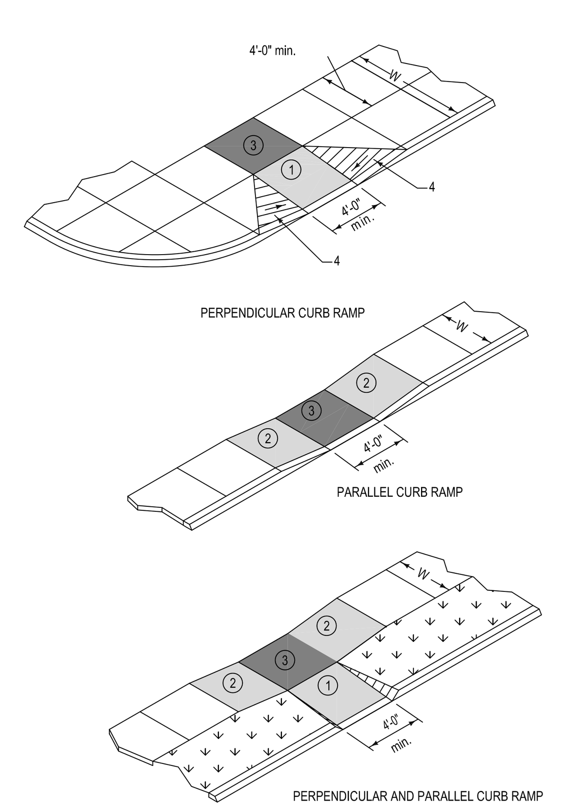


1. Perpendicular Curb Ramp: Target running slope of 6.25% with maximum running slope of 8.3%. Match pedestrian street crossing cross slope at back of curb. At mid-block crossings, cross slope may exceed 2.0% to match roadway grade.
2. Parallel Curb Ramp: Target cross slope of 1.5% with a maximum cross slope of 2.0%. The length of the parallel ramp is not required to exceed 15 feet, regardless of resulting slope. Do not exceed 8.3% slope for parallel ramps shorter than 15 feet.
3. Turning Space: Target slope of 1.5%, with a maximum slope perpendicular to the travel directions of 2.0%. At mid-block crossings, cross slope of landing may exceed 2.0% to match roadway grade. Minimum 4 feet by 4 feet.
4. Flare (10:1 max.) required if ramp is contiguous with sidewalk.

Key
- Curb Ramp
- Turning Space
- Detectable warning
- Grass

5. Parallel Curb Ramp: If normal sidewalk elevation cannot be achieved with the perpendicular ramp between the street and landing due to limited ramp length, provide a parallel ramp to make up the elevation difference between the landing and the standard sidewalk.

   The length of the parallel ramp is not required to exceed 15 feet, regardless of the resulting slope. Do not exceed 8.3% slope for parallel ramps shorter than 15 feet.
6. Turning Space: Target slope of 1.5% with maximum slope perpendicular to the travel directions of 2.0%. Minimum 4 feet by 4 feet.
7. Perpendicular Curb Ramp: Target running slope of 6.25% with maximum running slope of 8.3%.
8. Target cross slope of 1.5% with a maximum cross slope of 2.0%.
9. Match pedestrian street crossing cross slope or flatter.

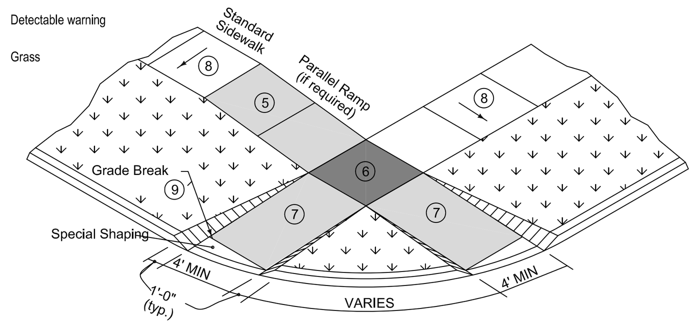


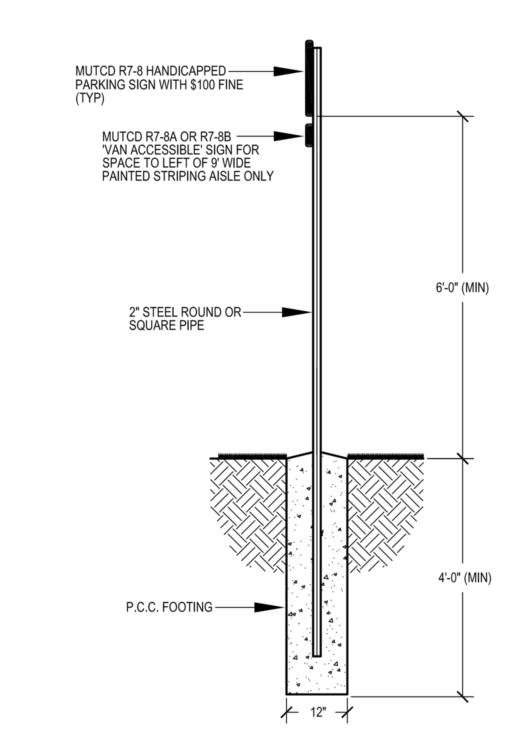


## ADA PARKING SIGN
NOT TO SCALE

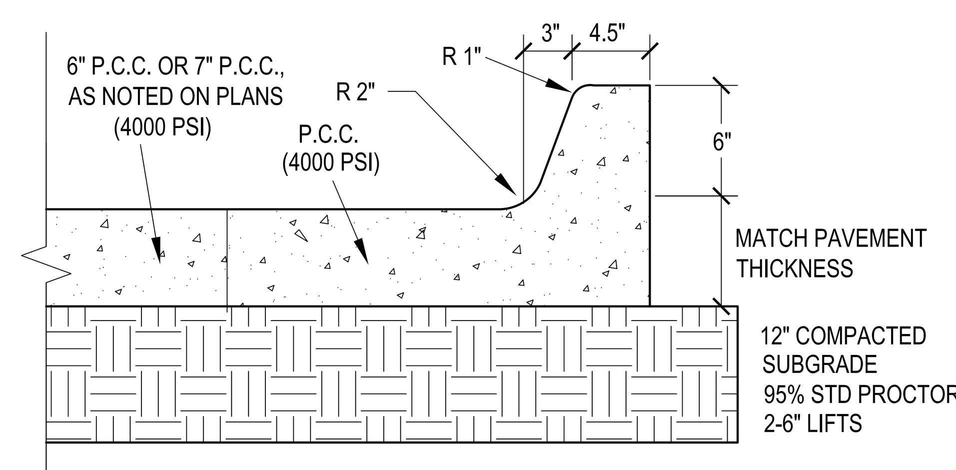


## STANDARD P.C.C. PAVING & CURB DETAIL
NOT TO SCALE

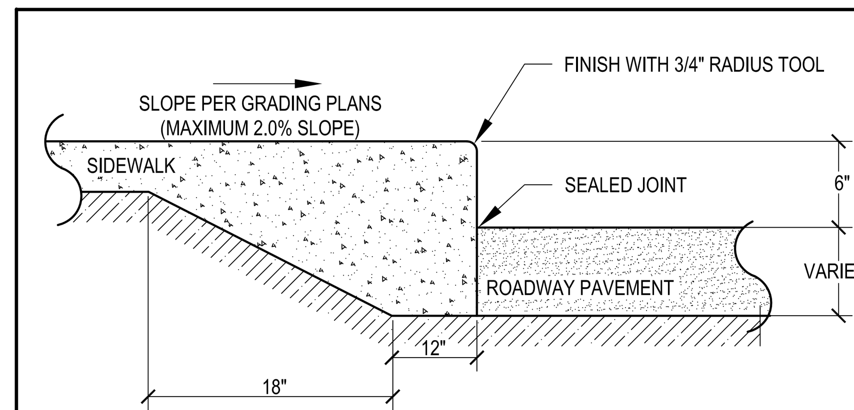


## TURNED DOWN WALK DETAIL
NOT TO SCALE

NOTES:
1. SLOPE SIDEWALK IN ACCORDANCE WITH GRADING PLAN, 1.0% - 1.5% CROSS SLOPE PREFERRED, 2% MAX CROSS SLOPE.

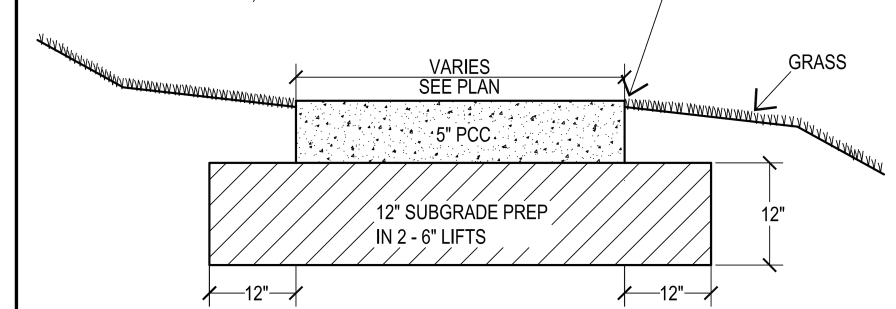


## SIDEWALK DETAIL
NOT TO SCALE

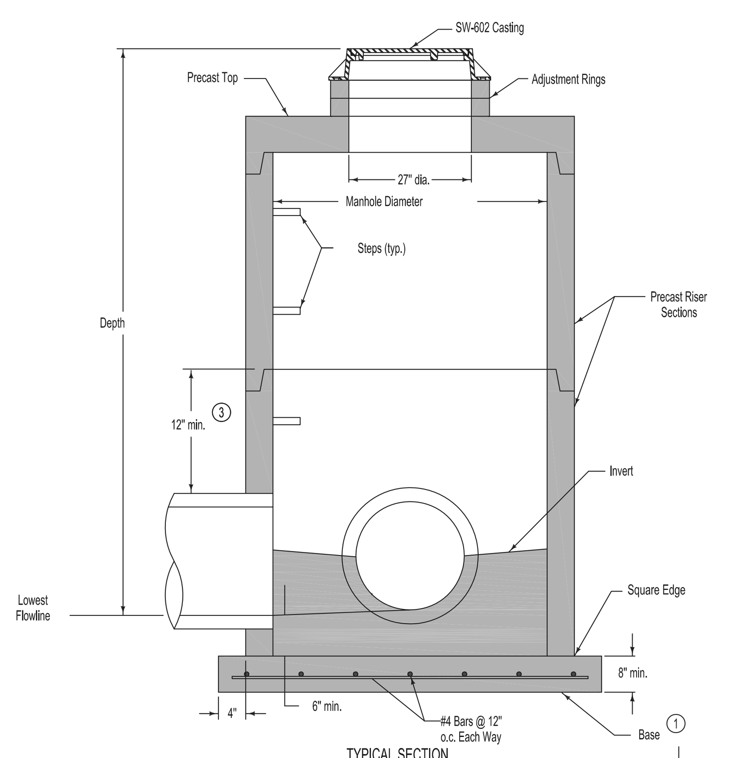


1. Cast-in-place base shown. If base is precast integral with bottom riser, the footprint of the base is not required to extend beyond the outer edge of the riser.
2. For additional configurations, maintain a minimum of 12 inches of concrete between vertical edges of pipe openings.
3. 12 inch minimum riser height above all pipe openings.

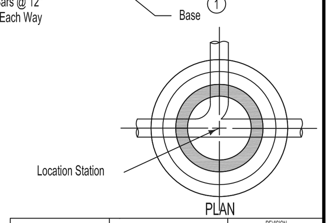


| Manhole Diameter (inches) | Maximum Pipe Diameter (inches) for 2 Pipes (2) At 180° Separation | At 90° Separation |
|---|---|---|
| 48 | 24 | 18 |
| 60 | 36 | 24 |
| 72 | 42 | 30 |
| 84 | 48 | 36 |
| 96 | 60 | 42 |

SUDAS | Iowa Department of Transportation | REVISION NEW 04-21-09
FIGURE 6010.401 | STANDARD ROAD PLAN | SW-401 SHEET 1 of 1
REVISIONS: New. Replaces SUDAS Type "M-A" Manhole. Will replace RA-50.
SUDAS DIRECTOR | DESIGN METHODS ENGINEER
CIRCULAR STORM SEWER MANHOLE

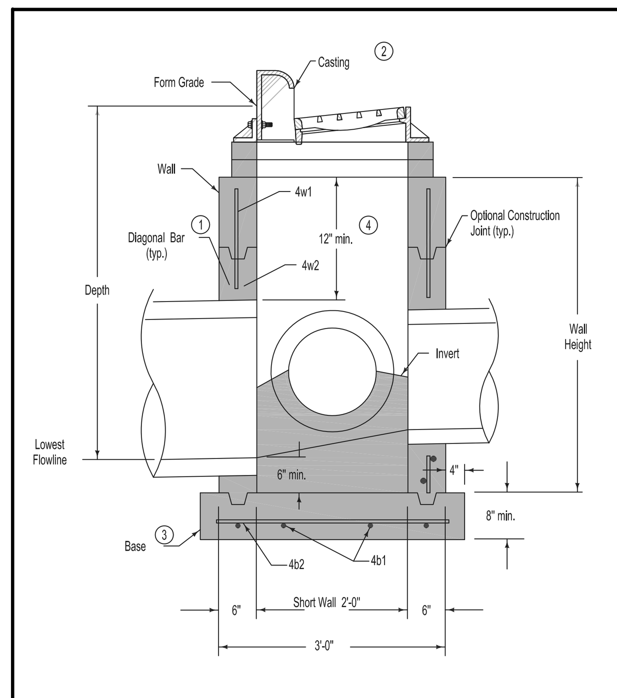


| REINFORCING BAR LIST | | | | | | |
|---|---|---|---|---|---|---|
| Mark | Size | Location | Shape | Length | Count | Spacing |
| 4w1 | 4 | Walls | ——— | Wall Height minus 4" | 14 | 12" |
| 4w2 | 4 | Long Walls | ——— | 3'-8" | Varies | 12" |
| 4w3 | 4 | Short Walls | ——— | 2'-8" | Varies | 12" |
| 4b1 | 4 | Base | ——— | 4'-2" | 4 | 10" |
| 4b2 | 4 | Base | ——— | 3'-2" | 5 | 10" |

1. Install four #4 diagonal bars at all pipe openings.
2. SW-603 Type R unless Type Q is specified in the contract documents.
3. Cast-in-place base shown. If base is precast integral with walls, the footprint of the base is not required to extend beyond the outer edge of the walls.
4. 12 inch minimum wall height above all pipes.

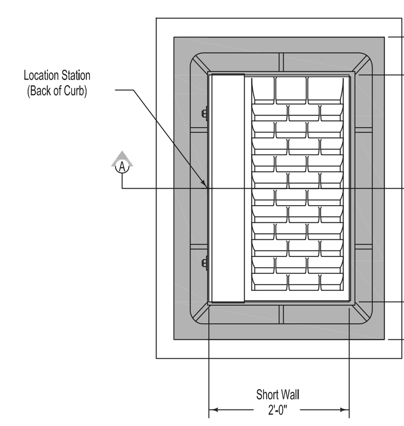


| MAXIMUM PIPE DIAMETERS | | |
|---|---|---|
| Pipe Location | Precast Structure | Cast-in-place Structure |
| Short Wall | 15" | 18" |
| Long Wall | 24" | 30" |

SUDAS | Iowa Department of Transportation | REVISION NEW 04-21-09
FIGURE 6010.501 | STANDARD ROAD PLAN | SW-501 SHEET 1 of 1
REVISIONS: New. Replaces SUDAS Type "M-A" Intake.
SUDAS DIRECTOR | DESIGN METHODS ENGINEER
SINGLE GRATE INTAKE

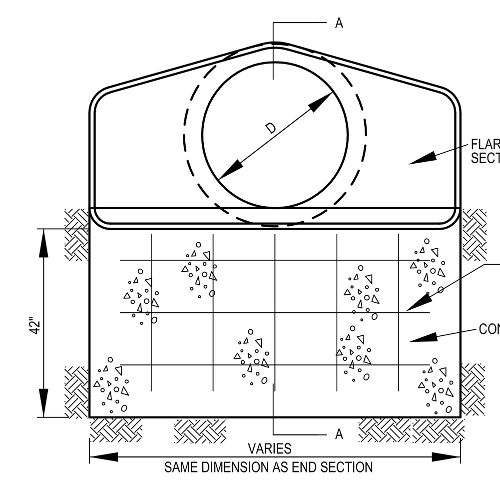


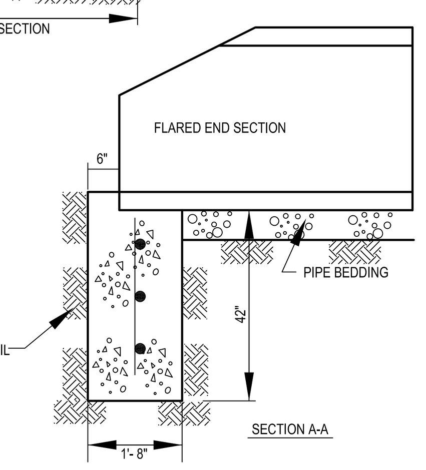


## FLARED END SECTION FOOTING DETAIL
NOT TO SCALE

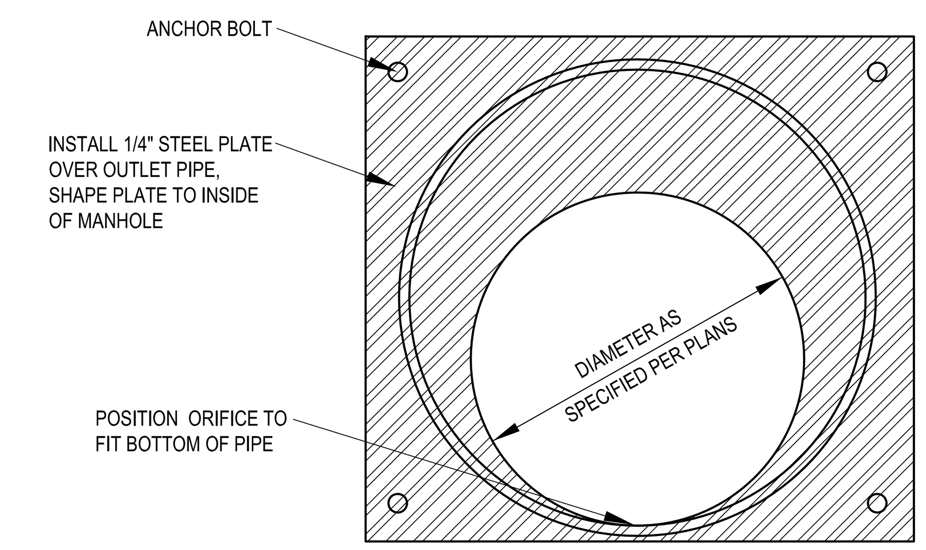


## ORIFICE PLATE DETAIL
NOT TO SCALE

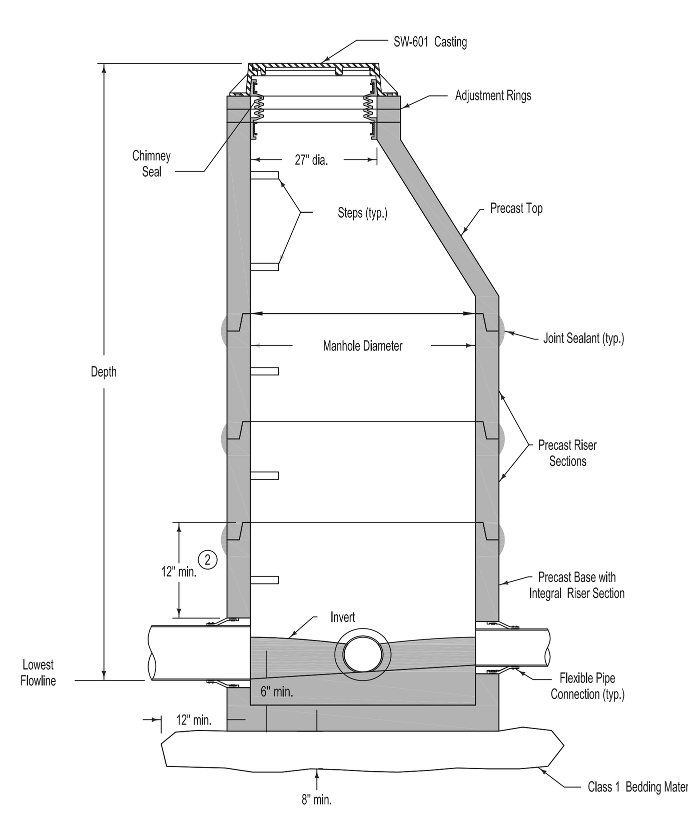


1. For additional configurations, maintain a minimum of 12 inches of concrete between vertical edges of pipe openings.
2. 12 inch minimum riser height above all pipe openings.

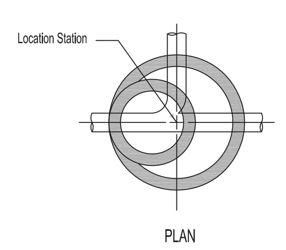


| Manhole Diameter (inches) | Maximum Pipe Diameter (inches) for 2 Pipes (1) At 180° Separation | At 90° Separation |
|---|---|---|
| 48 | 24 | 18 |
| 60 | 36 | 24 |
| 72 | 42 | 30 |
| 84 | 48 | 36 |
| 96 | 60 | 42 |

SUDAS | Iowa Department of Transportation | REVISION NEW 04-21-09
FIGURE 6010.301 | STANDARD ROAD PLAN | SW-301 SHEET 1 of 1
REVISIONS: New. Replaces SUDAS Type "A" Manhole. Will replace RA-51
SUDAS DIRECTOR | DESIGN METHODS ENGINEER
CIRCULAR SANITARY SEWER MANHOLE

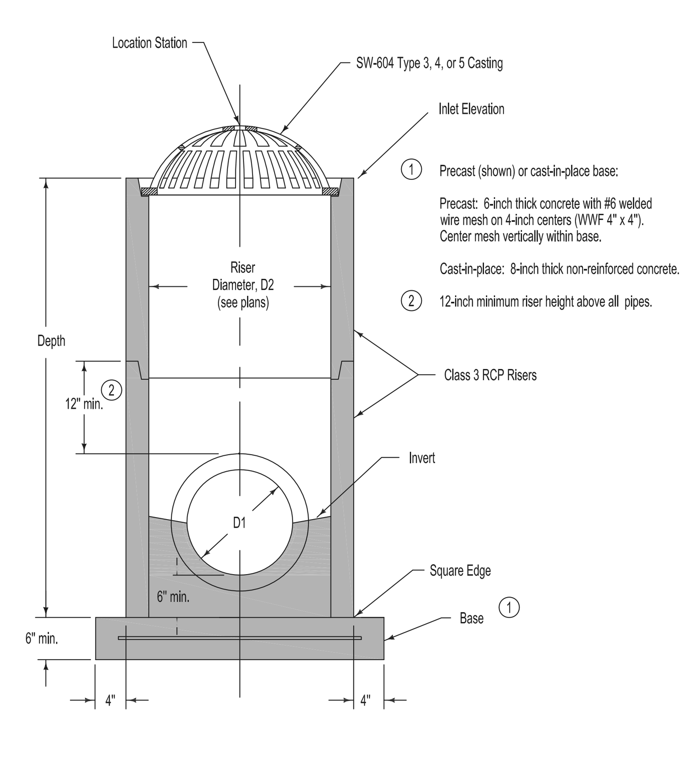


1. Precast (shown) or cast-in-place base:

   Precast: 6-inch thick concrete with #6 welded wire mesh on 4-inch centers (WWF 4" x 4"). Center mesh vertically within base.

   Cast-in-place: 8-inch thick non-reinforced concrete.
2. 12-inch minimum riser height above all pipes.

| INTAKE SIZE - CASE 1 | |
|---|---|
| Outlet Pipe Diameter, D1 | Minimum Riser Diameter, D2 |
| 12" | 18" |
| 15" | 24" |
| 18" | 24" |
| 21" | 30" |
| 24" | 30" |
| 27" | 36" |

SUDAS | Iowa Department of Transportation | REVISION 1 10-20-09
FIGURE 6010.512 | STANDARD ROAD PLAN | SW-512 SHEET 1 of 2
REVISIONS: Changed circle notes 1 & 2 and shading. Added sheet 2.
SUDAS DIRECTOR | DESIGN METHODS ENGINEER
CIRCULAR AREA INTAKE

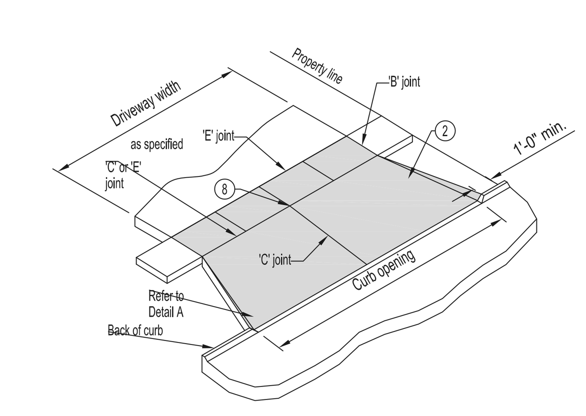


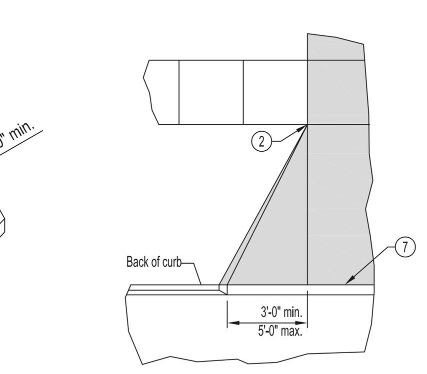


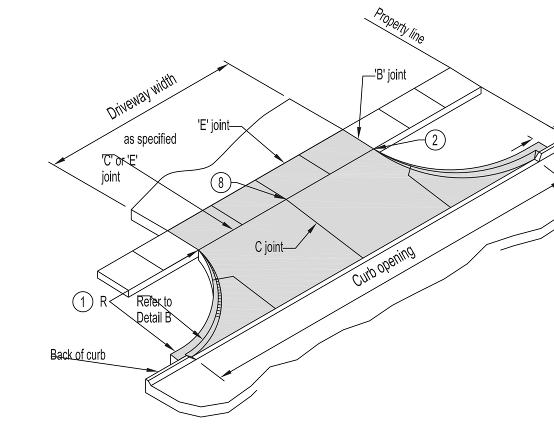


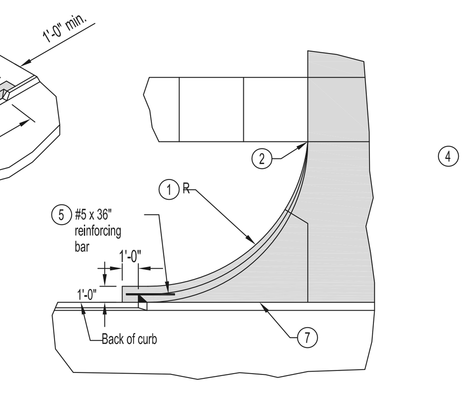


1. Driveway radius (R). Residential: 10 foot minimum, 15 foot maximum. Commercial and industrial: As specified in the contract documents.
2. Transition the curb height to 0 inches at end of taper/radius or at the front edge of sidewalk. Do not extend raised curb across sidewalk.
3. Pavement thickness. Residential: 6 inches minimum. Commercial and industrial: 7 inches minimum.
4. Sidewalk thickness through driveway to match thickness of driveway.
5. Center reinforcing bar vertically in the pavement.
6. Match thickness of adjacent roadway, 8 inches minimum.
7. Provide 'E' joint at back of curb unless 'B' joint is specified.
8. For alleys, invert the pavement crown 2% toward center of alley.

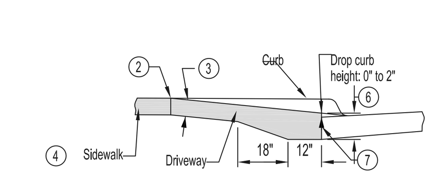


SUDAS | REVISION | FIGURE 7030.101 SHEET 1 OF 1
CONCRETE DRIVEWAY, TYPE A

M:\Land Projects 2013\130129\dwg\C0 COVER.dwg 4/29/2013 2:54:35 PM CDT


**Bishop Engineering**
"Planning Your Successful Development"
3501 104th Street
Des Moines, Iowa 50322-3825
Phone: (515)276-0467 Fax: (515)276-0217
Civil Engineering & Land Surveying Established 1959


# THE SHOPPES AT WILLIAMS POINTE
## SITE IMPROVEMENT PLAN
## DETAILS SHEET

REFERENCE NUMBER:

DRAWN BY: EWM

CHECKED BY: CJB

REVISION DATE:
06-17-13 CITY SUBMITTAL
07-09-13 CITY SUBMITTAL
07-19-13 CITY SUBMITTAL

PROJECT NUMBER: 130129

SHEET NUMBER: C6.1

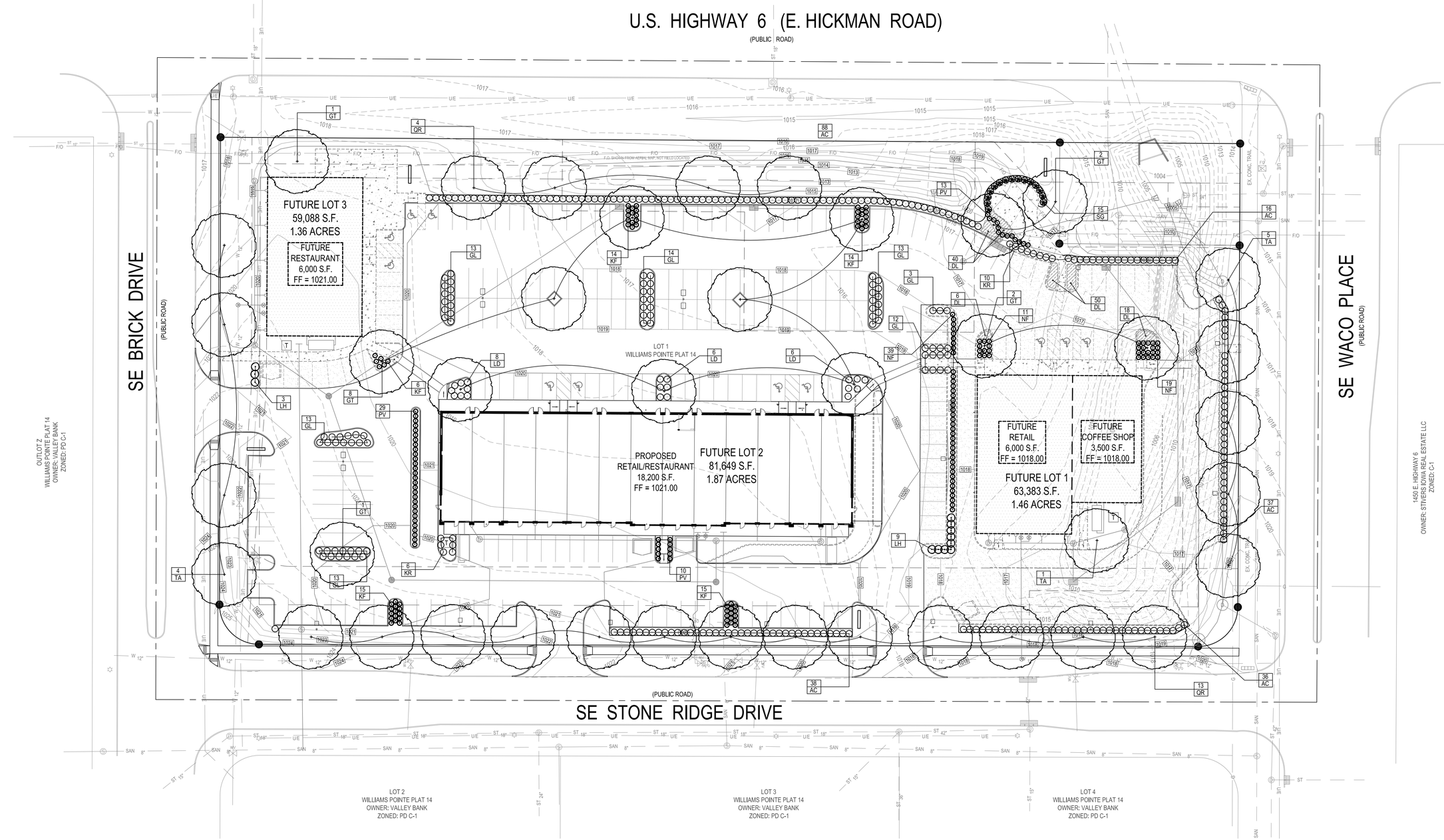


## PLANTING SCHEDULE:

| CODE | QUAN | COMMON NAME | LATIN NAME | SIZE | ROOT | NOTES |
|---|---|---|---|---|---|---|
| GT | 14 | SKYLINE HONEYLOCUST | GLEDITSIA TRIACANTHOS 'SKYLINE' | 2" | B&B | SPECIMAN FORM |
| QR | 17 | RED OAK | QUERCUS RUBRA | 2" | B&B | MATCHED SPECIMENS |
| TA | 10 | AMERICAN LINDEN | TILIA AMERICANA | 2" | B&B | MATCHED SPECIMENS |
| | | | | | | |
| NF | 69 | NEON FLASH SPIREA | SPIRAEA JAPONICA 'NEON FLASH' | #5 | CONT | FULL FORM - MATCHED |
| AC | 215 | ALPINE CURRANT | RIBES ALPINUM | #5 | CONT | FULL FORM - MATCHED |
| GL | 81 | GROW LOW SUMAC | RHUS AROMATICA 'GROW LOW' | #5 | CONT | FULL FORM - MATCHED |
| LH | 12 | LIMELIGHT HYDRANGEA | HYDRANGEA PANICULATA LIMELIGHT ' | #5 | CONT | FULL FORM - MATCHED |
| SG | 15 | SEA GREEN JUNIPER | JUNIPERUS CHINENSIS 'SEA GREEN' | #5 | CONT | FULL FORM - MATCHED |
| KR | 16 | KNOCKOUT ROSE | ROSA X 'RAD RAZZ' | #5 | CONT | FULL FORM - MATCHED |
| LD | 20 | LITTLE DEVIL NINEBARK | PHYSOCARPUS OPULIFOLIUS 'LITTLE DEVIL' | #5 | CONT | FULL FORM - MATCHED |
| | | | | | | |
| PV | 52 | SHENANDOAH SWITCHGRASS | PANICUM VIRGATUM 'SHENANDOAH' | #1 | CONT | FULLY ROOTED IN CONTAINER |
| KF | 64 | KARL FOERSTER FEATHER REED GRASS | CALAMAGROSTIS ACUTIFLORA 'KARL FOERSTER' | #1 | CONT | FULLY ROOTED IN CONTAINER |
| DL | 114 | ASSORTED STELLA DAYLILIES | HEMEROCALLIS X 'STELLA' | #1 | CONT | MIX RED & YELLOW STELLA DAYLILY |

GRAPHIC SCALE

30 0 15 30 60

1 inch = 30 ft. ( IN FEET )

## LANDSCAPE REQUIREMENTS:

| | | |
|---|---|---|
| TOTAL REQUIRED OPEN SPACE | : | 40,822 SF |
| PLANTS REQUIRED | | |
| TREES - 1 / 1000 SF | : | 41 TOTAL |
| SHRUBS - 1 / 1000 SF | | 41 TOTAL |
| PLANTS PROVIDED | | |
| TREES | : | 41 TOTAL |
| SHRUBS | : | 431 TOTAL |
| PERENNIALS/GRASSES | : | 230 TOTAL |

## LANDSCAPE NOTES:

1. ALL SODDING & LANDSCAPE PLANTINGS SHALL BE INSTALLED IN ACCORDANCE WITH THE URBAN STANDARD SPECIFICATIONS, UNLESS SPECIFIED OTHERWISE.
2. SOD ALL DISTRUBED AREAS WITHIN THE CONTRACT LIMITS, UNLESS NOTED OTHERWISE.
3. STAKE SOD ON ALL SLOPES 3 : 1 OR GREATER.
4. PLANT QUANTITIES ARE FOR CONTRACTORS CONVENIENCE, THE DRAWING SHALL PREVAIL IF A CONFLICT OCCURS.
5. ALL PLANT MATERIAL SHALL CONFORM TO THE " AMERICAN STANDARD FOR NURSERY STOCK" (ANSI Z60.1 - 1986).
6. CONTRACTOR SHALL GUARANTEE ALL PLANT MATERIAL FOR A PERIOD OF ONE YEAR FROM THE DATE OF INSTALLATION.
7. IT IS THE CONTRACTORS RESPONSIBILITY TO REMOVE IDENTIFICATION TAGS AND CORDS ON ALL PLANT MATERIAL PRIOR TO THE COMPLETION OF THE CONTRACT.
8. CONTRACTOR SHALL PLACE SHREDDED HARDWOOD MULCH AROUND ALL TREES, SHRUBS AND GROUND COVER BEDS TO A DEPTH OF 3 INCHES, UNLESS NOTED.
9. STAKE AND WRAP ALL DECIDUOUS TREES IMMEDIATELY AFTER PLANTING. STAKE ALL TREES ACCORDING TO THE STAKING DETAILS. CONTRACTOR SHALL ADJUST AND MAINTAIN GUYING TENSION THROUGHOUT THE PLANT ESTABLISHMENT PERIOD.
10. THE LANDSCAPING CONTRACTOR SHALL HAVE ALL UTILITIES LOCATED BEFORE STARTING ANY SITE WORK OR PLANTING. THE CONTRACTOR SHALL BE RESPONSIBLE FOR THE PROTECTION OF ALL EXISTING UTILITIES.
11. NO LANDSCAPE MATERIAL SHALL BE SUBSTITUTED WITHOUT THE AUTHORIZATION OF THE LANDSCAPE ARCHITECT.
12. ALL EDGING SHALL BE BLACK DIAMOND EDGING OR AN APPROVED EQUAL.
13. CONTRACTOR SHALL BE RESPONSIBLE TO WATER ALL NEW PLANTS FOR A PERIOD OF A MINIMUM OF 30 DAYS.

## PLANTING DETAILS:

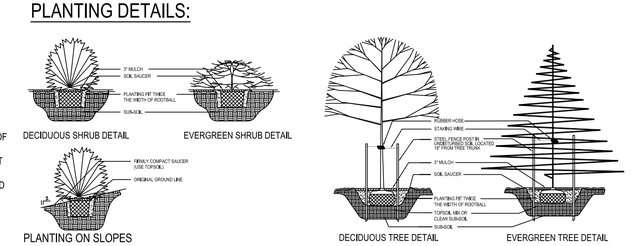



Bishop Engineering
"Planning Your Successful Development"
3501 104th Street
Des Moines, Iowa 50322-3825
Phone: (515)276-0467 Fax: (515)276-0217
Civil Engineering & Land Surveying
Established 1959


# THE SHOPPES AT WILLIAMS POINTE
## SITE IMPROVEMENT PLAN
## LANDSCAPE PLAN

REFERENCE NUMBER:

DRAWN BY: EWM

CHECKED BY: CJB

REVISION DATE:
06-17-13 CITY SUBMITTAL
07-09-13 CITY SUBMITTAL
07-19-13 CITY SUBMITTAL

PROJECT NUMBER: 130129

SHEET NUMBER: C5.1

M:\land projects 2013\130129\dwg\C5 LANDSCAPE.dwg 7/9/2013 11:00:49 AM CDT

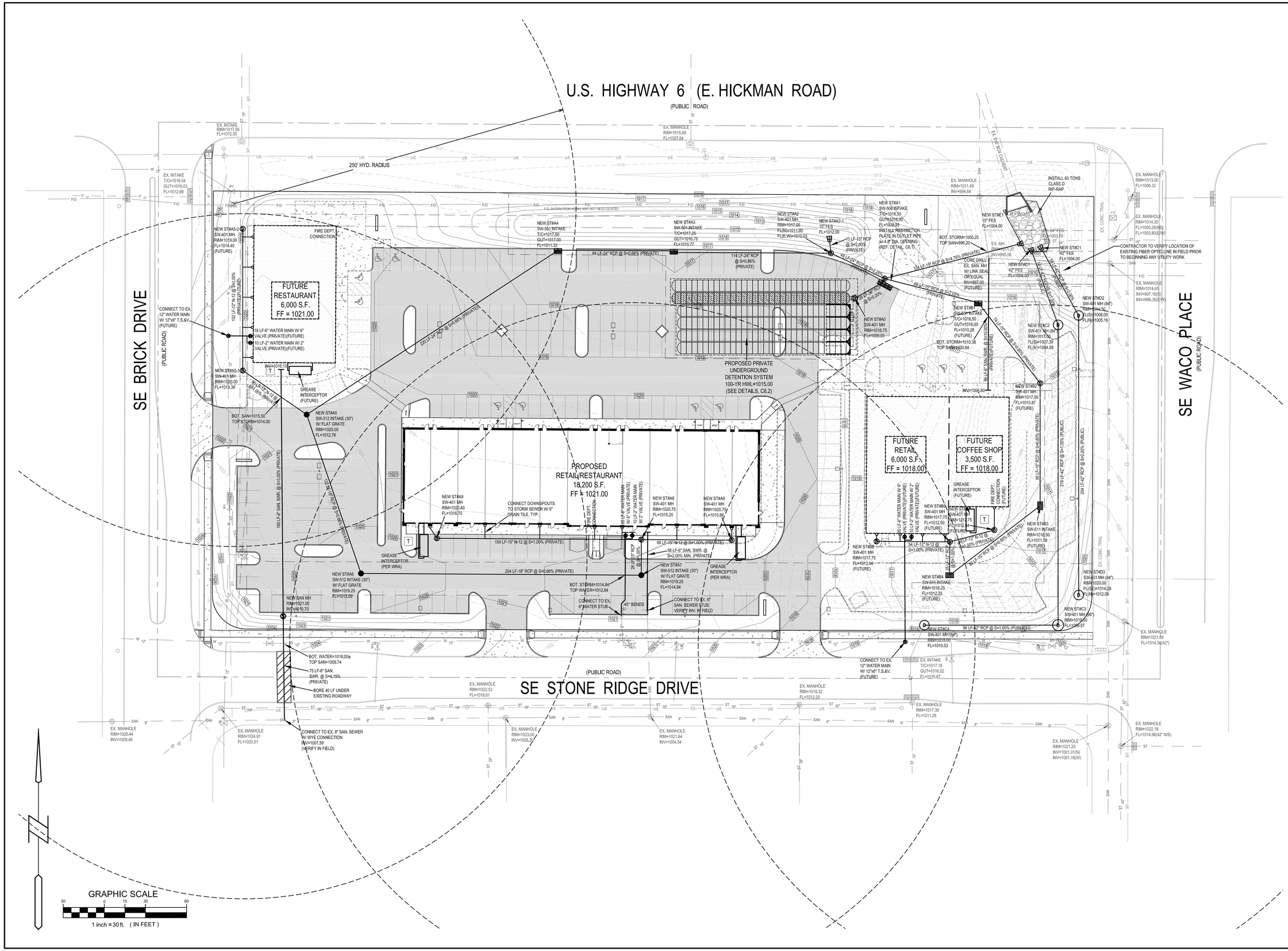



**Bishop Engineering**
"Planning Your Successful Development"
3501 104th Street
Des Moines, Iowa 50322-3825
Phone: (515)276-0467 Fax: (515)276-0217
Civil Engineering & Land Surveying Established 1959


# THE SHOPPES AT WILLIAMS POINTE
## SITE IMPROVEMENT PLAN
## UTILITY PLAN

| | |
|---|---|
| REFERENCE NUMBER: | |
| DRAWN BY: | EWM |
| CHECKED BY: | CJB |
| REVISION DATE: | 06-17-13 CITY SUBMITTAL<br>07-09-13 CITY SUBMITTAL<br>07-19-13 CITY SUBMITTAL |
| PROJECT NUMBER: | 130129 |
| SHEET NUMBER: | C4.1 |

M:\Land Projects 2013\130129\dwg\C4 UTILITY.dwg 4/29/2013 3:55:53 PM CDT

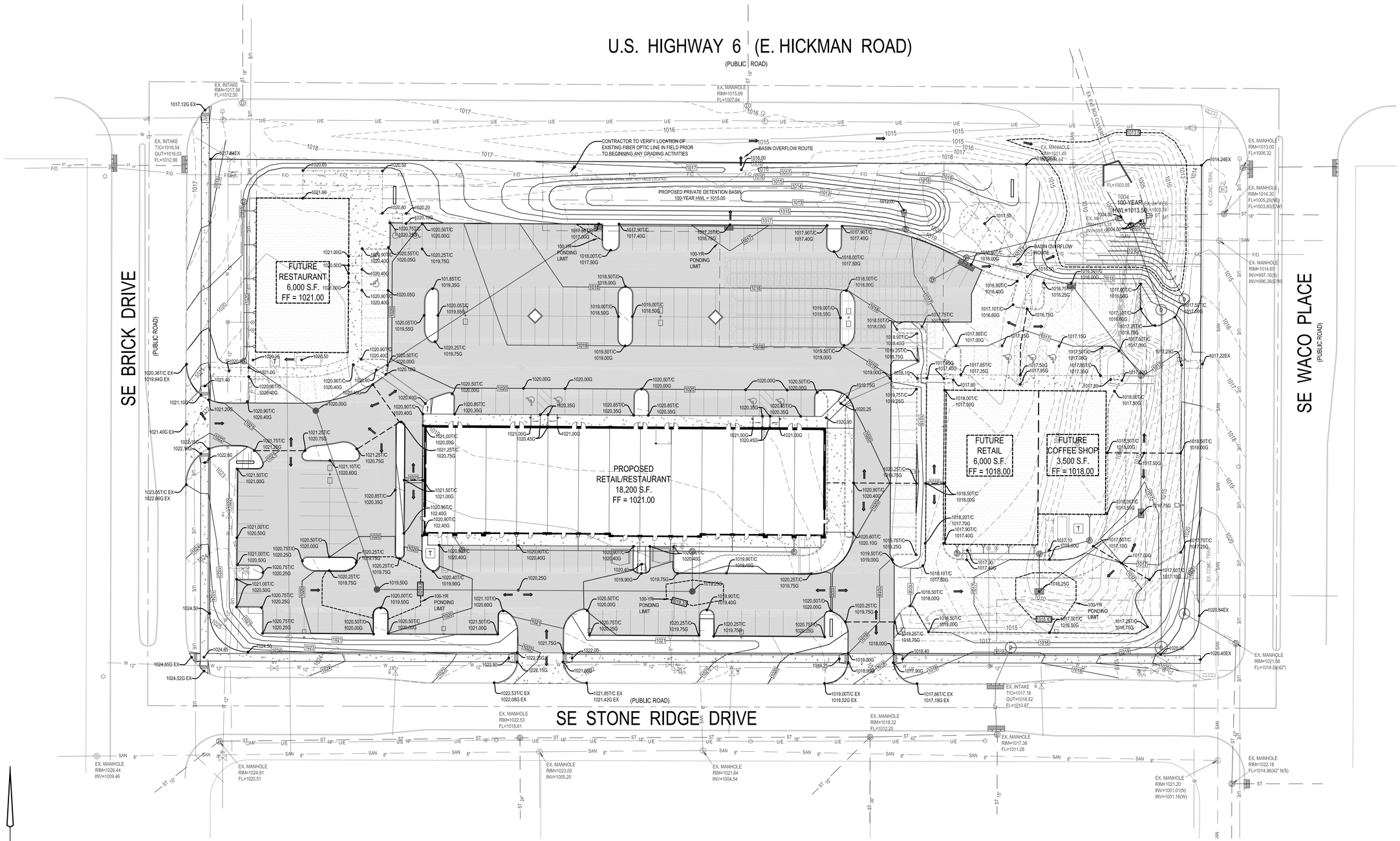


## GRADING NOTES:

1. STRIP AND STOCKPILE 6" OF TOPSOIL ON ALL DISTURBED AREAS.
2. RESPREAD TOPSOIL TO 6" DEPTH ON ALL GREEN (NON PAVED AREAS). IMPORT TOPSOIL AS NECESSARY TO ACHIEVE A MINIMUM OF 6" DEPTH IN ALL GREENS ARES.
3. TOPSOIL IS DEFINED AS: FERTILE, FRIABLE LOAM, CAPABLE OF SUSTAINING VIGOROUS PLANT GROWTH, FROM WELL DRAINED SITE FREE FROM FLOODING, NOT IN FROZEN OR MUDDY CONDITIONS; REASONABLY FREE FROM SUBSOIL, CLAY LUMPS, ROOTS, GRASS, WEEDS, STONES LARGER THAN ONE INCH (25 MM) DIAMETER, AND FOREIGN MATTER; ACIDITY RANGE (PH) OF 5.5 TO 7.5; CONTAINING MINIMUM 4 PERCENT AND MAXIMUM 20 PERCENT ORGANIC MATTER.
4. CONTRACTOR SHALL BE RESPONSIBLE FOR ENSURING ALL TOPSOIL REQUIREMENTS OF NPDES GENERAL PERMIT NO. 2 ARE MET AND SHALL PROVIDE THE CITY OF WAUKEE ENGINEERING DEPARTMENT WITH A WRITTEN VERIFICATION OF MEETING THE MINIMUM TOPSOIL REQUIREMENTS.


**Bishop Engineering**
"Planning Your Successful Development"
3501 104th Street
Des Moines, Iowa 50322-3825
Phone: (515)276-0467 Fax: (515)276-0217
Civil Engineering & Land Surveying Established 1959


# THE SHOPPES AT WILLIAMS POINTE
## SITE IMPROVEMENT PLAN
## GRADING PLAN

REFERENCE NUMBER:

DRAWN BY: EWM

CHECKED BY: CJB

REVISION DATE:
06-17-13 CITY SUBMITTAL
07-09-13 CITY SUBMITTAL
07-19-13 CITY SUBMITTAL

PROJECT NUMBER: 130129

SHEET NUMBER: C3.1

M:\Land Projects 2013\130129\dwg\C3 GRADING.dwg 4/29/2013 3:50:08 PM CDT

# STORM WATER POLLUTION PREVENTION PLAN

## LEGAL DESCRIPTION:

LOT 1 WILLIAMS POINTE PLAT 14, AN OFFICIAL PLAT NOW INCLUDED IN AND FORMING A PART OF THE CITY OF WAUKEE, DALLAS COUNTY, IOWA.

SAID TRACT OF LAND BEING SUBJECT TO AND TOGETHER WITH ANY AND ALL
EASEMENTS OF RECORD.

## ADDRESS:

1300 E. HICKMAN ROAD
WAUKEE, IA 50263

## OWNER:

LEG INVESTMENT, LC
CONTACT: RICHARD MARGULIES
1603 22ND STREET, SUITE 103
WEST DES MOINES, IA 50265
PH: 515-226-9300

## PREPARED FOR:

FERGUSON REALTY
CONTACT: DARIN FERGUSON
1840 NW 118TH ST, SUITE 100
CLIVE, IA 50325
PH: 515-440-0600

## SITE AREA:

204,120 SQ. FT. = 4.69 ACRES

## ZONING:

PD C-1 (PLANNED DEVELOPMENT OVERLAY DISTRICT & COMMUNTY & HIGHWAY SERVICE COMMERCIAL DISTRICT)

## BENCHMARK:

BM: NE TAGGED BURY BOLT ON FIRE HYDRANT LOCATED AT THE NE CORNER OF SE LEGACY POINT BOULEVARD AND SE LAUREL DRIVE
ELEVATION = 1036.60 (FROM WILIAMS POINTE PLAT 14)

SITE BM: ARROW ON FIRE HYDRANT LOCATED AT THE SE CORNER OF HICKMAN ROAD AND SE BRICK DRIVE
ELEVATION = 1020.40

## LEGEND:

- SILT FENCE (TYP)
- 120 — EXISTING CONTOUR
- 120 — PROPOSED CONTOUR
- STABILIZED ENTRANCE 30'X90'-6" DEEP 2" CLEAN CRUSHED ROCK DRIVE ON GEOTEXTILE

## UTILITY LEGEND:

- SANITARY SEWER MANHOLE
- STORM SEWER MANHOLE
- SAN — SANITARY SEWER
- ST — STORM SEWER
- G — GAS LINE
- W — WATER LINE
- U/E — UNDERGROUND ELECTRIC
- O/E — OVERHEAD ELECTRIC
- T — TELEPHONE LINE
- TELEPHONE RISER
- TELEPHONE MANHOLE
- GROUND LIGHT
- LIGHT POLE
- POWER POLE
- TRANSFORMER POLE
- ELECTRIC TRANSFORMER
- ELECTRIC METER
- CLEAN-OUT
- INTAKE
- SURFACE INTAKE
- TRAFFIC SIGNAL MANHOLE
- FIRE HYDRANT
- WATER VALVE
- GAS METER
- (7) DENOTES NUMBER OF PARKING STALLS

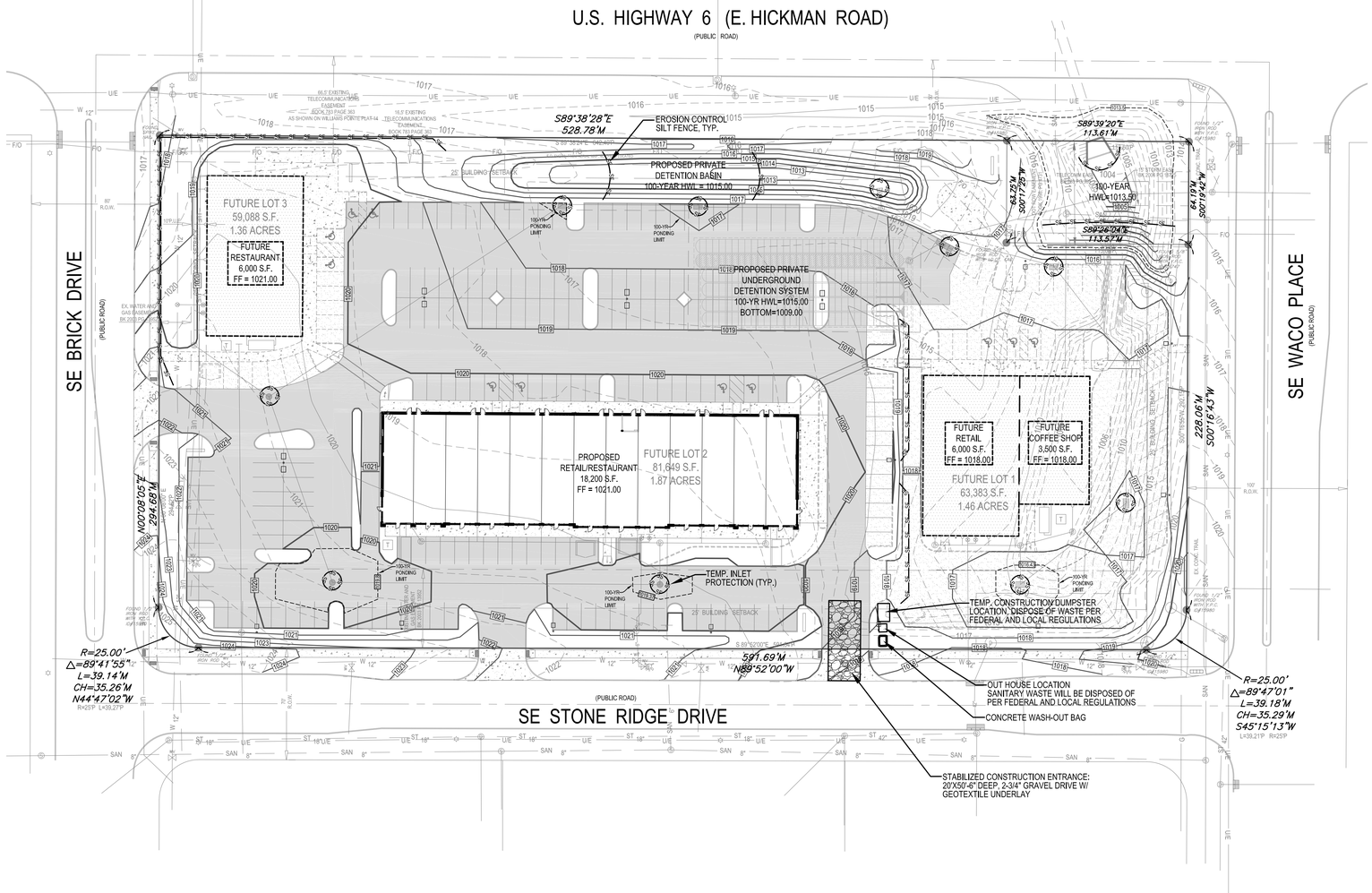


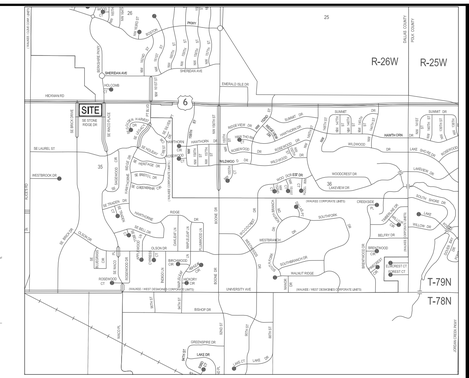


VICINITY MAP
SCALE: 1" = 2000'

## GENERAL NOTES:

1. SEE SUPPLEMENTAL DETAILED STORM WATER POLLUTION PREVENTION PLAN PROVIDED IN THE PROJECT SPECIFICATIONS FOR ALL EROSION CONTROL MEASURES, ADDITIONAL DETAILS, AND ADDITIONAL NOTES. ADDITIONAL NOTES AND MEASURES CALLED OUT ON SWPPP SHALL BE CONSIDERED INCIDENTAL AND INCLUDED IN ORIGINAL BID.
2. ALL WORK SHALL BE DONE IN ACCORDANCE WITH THE STATEWIDE URBAN STANDARD SPECIFICATIONS FOR PUBLIC IMPROVEMENTS AND THE LOCAL JURISDICTIONAL GOVERNMENT REQUIREMENTS, CODES, REGULATIONS, ORDINANCES, STANDARDS, POLICIES, AND SPECIAL PROVISIONS.
3. ALL WORK SHALL BE IN ACCORDANCE WITH THE CURRENT O.S.H.A. CODES AND STANDARDS, NOTHING INDICATED ON THESE PLANS SHALL RELIEVE THE CONTRACTOR FROM COMPLYING WITH ANY AND ALL APPROPRIATE SAFETY REGULATIONS.
4. THE CONTRACTOR SHALL BE RESPONSIBLE FOR THE LOCATION OF ALL UTILITIES. ANY DAMAGE TO SAID UTILITIES SHALL BE REPAIRED AT THE CONTRACTOR'S EXPENSE.
5. CONTRACTOR SHALL CONTACT THE CITY OF WAUKEE ENGINEERING DEPARTMENT PRIOR TO CONSTRUCTION. CONTRACTOR SHALL GIVE THE PUBLIC WORKS 48 HOURS ADVANCE NOTICE. ALL WORK IN THE RIGHT-OF-WAY SHALL BE DONE IN ACCORDANCE WITH THE REQUIREMENTS OF THE LOCAL JURISDICTIONAL GOVERNMENT. ALL NECESSARY CONSTRUCTION SIGNS AND BARRICADES DURING CONSTRUCTION WILL BE FURNISHED BY THE CONTRACTOR. SIGNS AND BARRICADES MUST BE IN CONFORMANCE WITH THE "MANUAL ON UNIFORM TRAFFIC CONTROL DEVICES STREETS AND HIGHWAYS" AND IN ACCORDANCE WITH THE LOCAL GOVERNMENT REQUIREMENTS.
6. CONTRACTOR SHALL OBTAIN ANY AND ALL NECESSARY PERMITS FROM THE CITY, COUNTY, OR STATE PRIOR TO ANY CONSTRUCTION. A SWPPP AND NPDES PERMIT SHALL BE AVAILABLE ON SITE AT ALL TIMES. THIS SWPPP DRAWING IS ONLY ONE PART OF THE SWPPP WHICH INCLUDES THE NPDES PERMIT, NARRATIVE, GRADING AND UTILITY PLANS, DETAILED CONSTRUCTION PLANS, SITE PLANS, SOILS REPORTS, CONTRACTOR CERTIFICATIONS, INSPECTION REPORTS, AND OTHER SUPPORTING INFORMATION AND DOCUMENTATION. THE CONTRACTOR SHALL BE RESPONSIBLE FOR KEEPING AN ANNOTATED COPY OF THE SWPPP ON SITE DOCUMENTING ANY AND ALL CHANGES, ADDITIONS, AND UPDATES TO THE SWPPP.
7. EROSION CONTROL MEASURES SHOWN AND QUANTITIES LISTED ON THIS PLAN ARE AN ESTIMATION FOR BIDDING PURPOSES ONLY IN ORDER TO ESTABLISH UNIT PRICES. ADDITIONAL MEASURES TO MEET THE REQUIREMENTS OF THE SWPPP AND CHANGING SITE CONDITIONS MAY BE NEEDED IN ORDER TO PREVENT POLLUTION OF THE STORM WATER DISCHARGE FROM THIS SITE. CONTRACTOR SHALL SUBMIT CHANGE ORDERS TO THE OWNER FOR HIS APPROVAL IN ADVANCE OF EXTRA WORK.
8. ALL POLLUTION PREVENTION MEASURES REQUIRED, AS A RESULT OF CONSTRUCTION ACTIVITIES, ARE THE RESPONSIBILITY OF THE CONTRACTOR. THE CONTRACTOR SHALL TAKE ALL ACTIONS NECESSARY FOR INSTALLATION OF CONTROL MEASURES FOR COMPLIANCE WITH PERMIT REQUIREMENTS.
9. INSPECTOR SHALL MEET IDNR AND EPA REQUIREMENTS FOR ALL INSPECTION INCLUDING BUT NOT LIMITED TO DISTURBED AREAS, TRACK OUT, ENTRANCE, DISCHARGE POINTS AND STORAGE AREAS.
10. MODIFICATIONS TO THE SWPPP SHALL BE IMPLEMENTED WITHIN 7 CALENDAR DAYS FOLLOWING THE INSPECTION.
11. THE INSPECTION REPORTS SHALL INCLUDE THE INSPECTORS QUALIFICATIONS.
12. ALL CONTRACTORS SHALL SUBMIT A CONTRACTOR'S CERTIFICATION STATEMENT PRIOR TO BEGINNING WORK AT THE SITE. ALL CERTIFICATIONS SHALL BE INCLUDED IN THE SWPPP.
13. CONTRACTOR SHALL PICK UP ANY DEBRIS SPILLED ONTO THE ADJACENT RIGHT-OF-WAY OR ABUTTING PROPERTIES AS THE RESULT OF THIS CONSTRUCTION PROJECT. PERFORM CLEAN UP IMMEDIATELY. DISPOSE OF ALL DEBRIS OFF SITE IN A LAWFUL MANNER. CONTRACTOR SHALL LIMIT ACCESS TO THE SITE ACROSS STABILIZED ACCESS IN ORDER TO LIMIT THE TRACKING OF SITE SOIL ONTO ADJACENT RIGHT-OF-WAY AND PROPERTY.
14. CONTRACTOR SHALL TAKE ALL NECESSARY MEASURES TO PROTECT THE EXISTING LANDSCAPING AND INSURE THE SURVIVAL OF EXISTING TREES AND SHRUBS. REPLACE ALL DAMAGED LANDSCAPING MATERIAL AT NO COST TO THE OWNER.
15. ALL DISTURBED AREAS SHALL BE SEEDED, FERTILIZED AND MULCHED AS SOON AS POSSIBLE AFTER CONSTRUCTION IS COMPLETE.
16. AS FINAL STABILIZATION IS ACHIEVED, THE CONTRACTOR SHALL REMOVE CONTROL DEVICES AND REPAIR AND STABILIZE AREAS DISTURBED DURING THE REMOVAL PROCESS. REMOVAL IS INCLUDED IN THE UNIT PRICE FOR THE CONTROL DEVICE.

## EROSION CONTROL NOTES:

1. INSTALL PERIMETER SILT FENCE AS SHOWN ON PLANS PRIOR TO CONSTRUCTION.
2. INSTALL INTAKE PROTECTION WITH SILT FENCE IMMEDIATELY AFTER STORM SEWER CONSTRUCTION.
3. INSTALL FINISHED PAVING INLET PROTECTION IMMEDIATELY AFTER PAVING IS COMPLETED AROUND INTAKE.

## TOPSOIL NOTES:

1. STRIP AND STOCKPILE 6" OF TOPSOIL ON ALL DISTURBED AREAS.
2. RESPREAD TOPSOIL TO 6" DEPTH ON ALL GREEN (NON PAVED AREAS). IMPORT TOPSOIL AS NECESSARY TO ACHIEVE A MINIMUM OF 6" DEPTH IN ALL GREENS ARES.
3. TOPSOIL IS DEFINED AS: FERTILE, FRIABLE LOAM, CAPABLE OF SUSTAINING VIGOROUS PLANT GROWTH, FROM WELL DRAINED SITE FREE FROM FLOODING, NOT IN FROZEN OR MUDDY CONDITIONS; REASONABLY FREE FROM SUBSOIL, CLAY LUMPS, ROOTS, GRASS, WEEDS, STONES LARGER THAN ONE INCH (25 MM) DIAMETER, AND FOREIGN MATTER; ACIDITY RANGE (PH) OF 5.5 TO 7.5; CONTAINING MINIMUM 4 PERCENT AND MAXIMUM 20 PERCENT ORGANIC MATTER.
4. CONTRACTOR SHALL BE RESPONSIBLE FOR ENSURING ALL TOPSOIL REQUIREMENTS OF NPDES GENERAL PERMIT NO. 2 ARE MET.

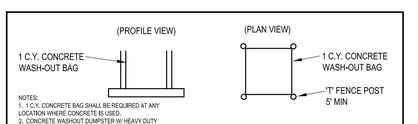


**CONCRETE WASH-OUT BAG DETAIL**
NOT TO SCALE

STABILIZED ENTRANCE SHALL BE AT LEAST 50' LONG AND EXTEND TO THE PUBLIC ROADWAY.

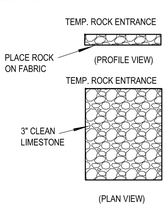


**SITE ENTRANCE DETAIL**
NOT TO SCALE

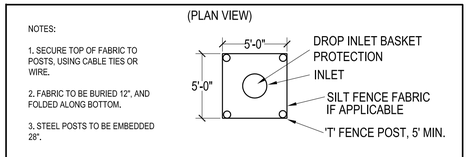


**INLET PROTECTION DETAIL**
NOT TO SCALE

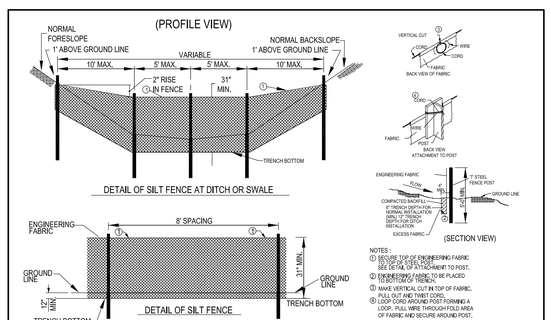


**SILT FENCE DETAILS**
NOT TO SCALE

IOWA ONE CALL
1-800-292-8989
www.iowaonecall.com
Know what's below. Call before you dig.

## UTILITY NOTE:

THE LOCATION OF THE UTILITIES INDICATED ON THE PLANS ARE TAKEN FROM EXISTING PUBLIC RECORDS AND ARE APPROXIMATE LOCATIONS. THE EXACT LOCATIONS OF ALL UTILITIES MUST BE ASCERTAINED IN THE FIELD. IT SHALL BE THE DUTY OF THE CONTRACTOR TO DETERMINE WHETHER ANY ADDITIONAL FACILITIES OTHER THAN THOSE SHOWN ON THE PLANS MAY BE PRESENT.

GRAPHIC SCALE
40 0 20 40 20
1 inch = 40 ft. ( IN FEET )


Bishop Engineering
"Planning Your Successful Development"
3501 104th Street
Des Moines, Iowa 50322-3825
Phone: (515)276-0467 Fax: (515)276-0217
Civil Engineering & Land Surveying
Established 1959


THE SHOPPES AT WILLIAMS POINTE
SITE IMPROVEMENT PLAN
**SWPPP**

REFERENCE NUMBER:

DRAWN BY: EWM

CHECKED BY: CJB

REVISION DATE:
06-17-13 CITY SUBMITTAL
07-09-13 CITY SUBMITTAL
07-19-13 CITY SUBMITTAL

PROJECT NUMBER: 130129

SHEET NUMBER: C7.1

M:\Land Projects 2013\130129\dwg\C7 SWPPP.dwg 4/29/2013 4:10:17 PM CDT