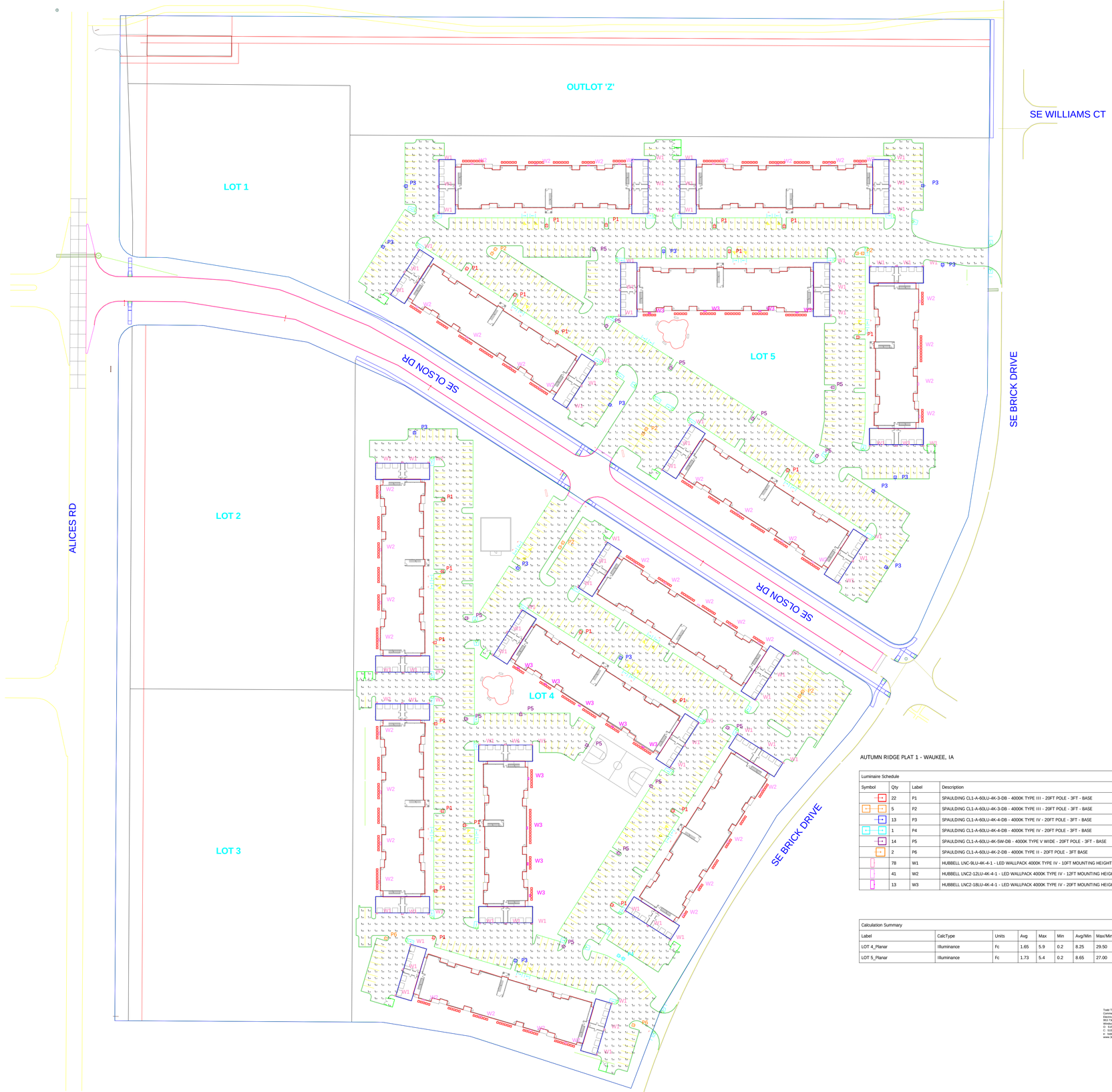

AUTUMN RIDGE PLAT 1 - WAUKEE, IA

Luminaire Schedule					
Symbol	Qty	Label	Description	Lum. Watts	Total Watts
	22	P1	SPAULDING CL1-A-60LU-4K-3-DB - 4000K TYPE III - 20FT POLE - 3FT - BASE	140	3080
	5	P2	SPAULDING CL1-A-60LU-4K-3-DB - 4000K TYPE III - 20FT POLE - 3FT - BASE	140	1400
	13	P3	SPAULDING CL1-A-60LU-4K-4-DB - 4000K TYPE IV - 20FT POLE - 3FT - BASE	140	1820
	1	P4	SPAULDING CL1-A-60LU-4K-4-DB - 4000K TYPE IV - 20FT POLE - 3FT - BASE	140	280
	14	P5	SPAULDING CL1-A-60LU-4K-5W-DB - 4000K TYPE V WIDE - 20FT POLE - 3FT - BASE	140	1960
	2	P6	SPAULDING CL1-A-60LU-4K-2-DB - 4000K TYPE II - 20FT POLE - 3FT BASE	140	280
	78	W1	HUBBELL LNC-9LU-4K-4-1 - LED WALLPACK 4000K TYPE IV - 10FT MOUNTING HEIGHT	22	1716
	41	W2	HUBBELL LNC2-12LU-4K-4-1 - LED WALLPACK 4000K TYPE IV - 12FT MOUNTING HEIGHT	29	1189
	13	W3	HUBBELL LNC2-18LU-4K-4-1 - LED WALLPACK 4000K TYPE IV - 20FT MOUNTING HEIGHT	45	585

Calculation Summary							
Label	CalcType	Units	Avg	Max	Min	Avg/Min	Max/Min
LOT 4_Planar	Illuminance	Fc	1.65	5.9	0.2	8.25	29.50
LOT 5_Planar	Illuminance	Fc	1.73	5.4	0.2	8.65	27.00

Todd Tiemen LC, IES
Commercial Lighting Specialist
Electrical Engineering and Equipment Company
953 73rd Street
Windsor Heights, IA 50324
P: 515-224-4074
C: 515-224-4074
e : todd.tiemen@ee-co.com
www.ee-co.com

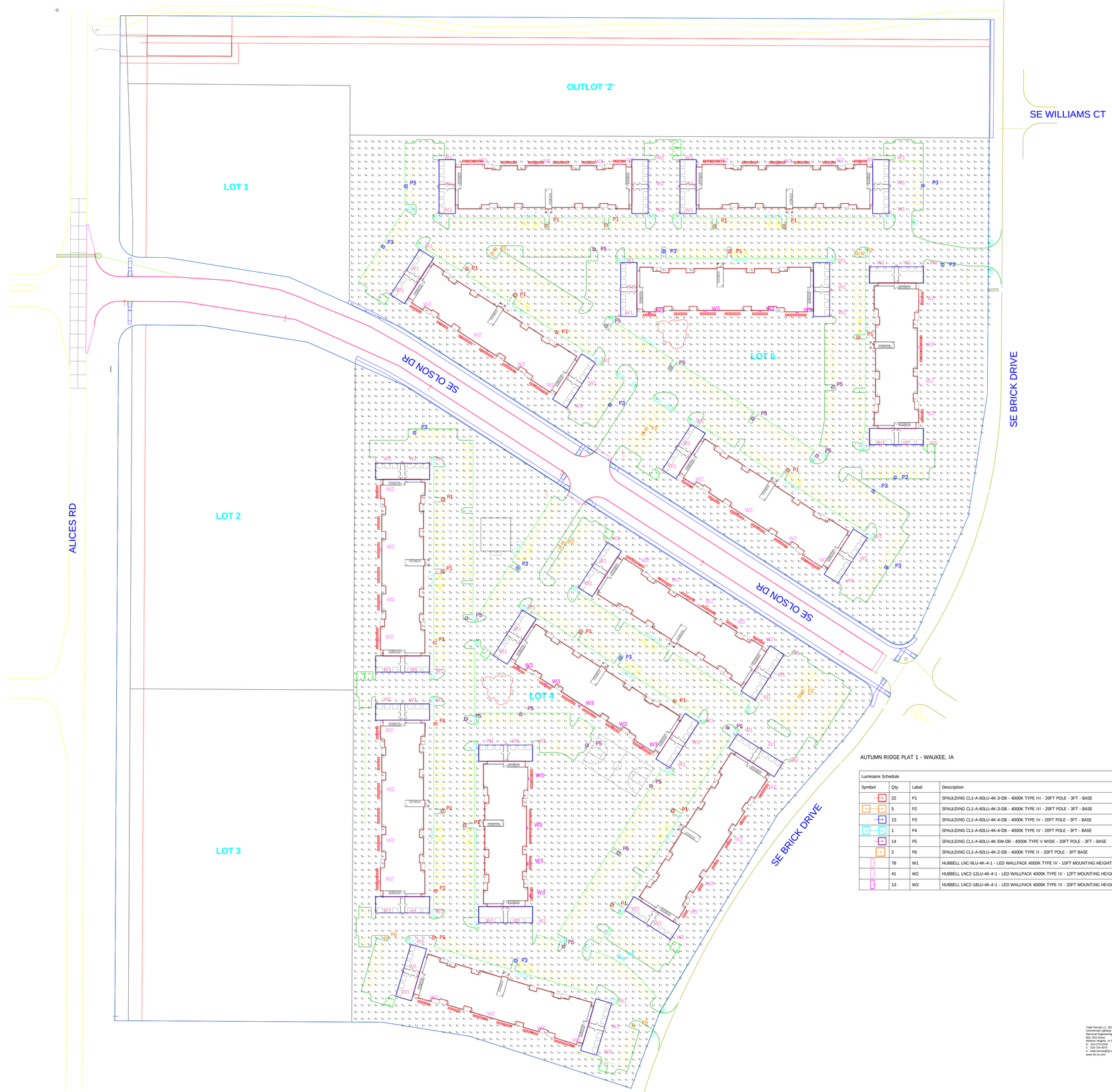

AUTUMN RIDGE PLAT 1 - WAUKEE, IA

Luminaire Schedule

Symbol	Qty	Label	Description	Lum. Watts	Total Watts
	22	P1	SPAULDING CL1-A-60LU-4K-3-DB - 4000K TYPE III - 20FT POLE - 3FT - BASE	140	3080
	5	P2	SPAULDING CL1-A-60LU-4K-3-DB - 4000K TYPE III - 20FT POLE - 3FT - BASE	140	1400
	13	P3	SPAULDING CL1-A-60LU-4K-4-DB - 4000K TYPE IV - 20FT POLE - 3FT - BASE	140	1820
	1	P4	SPAULDING CL1-A-60LU-4K-4-DB - 4000K TYPE IV - 20FT POLE - 3FT - BASE	140	280
	14	P5	SPAULDING CL1-A-60LU-4K-5W-DB - 4000K TYPE V WIDE - 20FT POLE - 3FT - BASE	140	1960
	2	P6	SPAULDING CL1-A-60LU-4K-2-DB - 4000K TYPE II - 20FT POLE - 3FT BASE	140	280
	78	W1	HUBBELL LNC-9LU-4K-4-1 - LED WALLPACK 4000K TYPE IV - 10FT MOUNTING HEIGHT	22	1716
	41	W2	HUBBELL LNC2-12LU-4K-4-1 - LED WALLPACK 4000K TYPE IV - 12FT MOUNTING HEIGHT	29	1189
	13	W3	HUBBELL LNC2-18LU-4K-4-1 - LED WALLPACK 4000K TYPE IV - 20FT MOUNTING HEIGHT	45	585

Todd Tiernan LC, IES
Commercial Lighting Specialist
Electrical Engineering and Equipment Company
2500 N. Mayfair Rd.
Wauwatosa Heights, WI 53226
O: 515-273-5226
C: 515-724-4074
e: todd.tiernan@ee-co.com
www.ee-co.com

CIMARRON LED	Cat.# CL1-A-60LU-4K-X-DB		Approvals	SPAULDING LIGHTING
	Job AUTUMN RIDGE	Type PX		

SPECIFICATIONS

Construction:
- Stylish vertically finned die-cast solid top housing for maximum heat dissipation; Stops collection of unsightly debris from gathering on top of the housing
- Rugged lower die-cast aluminum heat sink accelerates thermal management and optimizes PCB and optical performance
- Separate optical and electrical compartment for optimum component operation
- One piece die cut silicone gasket ensures weather proof seal around each individual LED for IP65 rating
- Backlight Control (BC) option available for 85% spill light reduction, doesn't change fixture appearance or EPA, recommended for Type III and Type IV distributions
- Stamped bezel provides mechanical compression to seal the optical assembly
- Complements the Hubbell Southwest series of outdoor fixtures
- Weight - 45.0 pounds, EPA - 1.3 ft^2
- Features exclusive wiHUBB technology
  -Wireless system for On/Off and 0-10VDC full range dimming control
  -Programmable autonomous operation
- Suitable for applications requiring 3G testing prescribed by ANSI C136.31

Optics:
- Choice of 32 high brightness LED configurations with individual acrylic lenses specially designed for IES Type II, III, IV and V distributions
- CCT: 5100K standard, 3000K, 4200K and turtle friendly Amber LED options
- CRI: 70

Electrical:
- Universal input voltage 120-277 VAC, 50/60 Hz
- Integral step-down transformer for 347V & 480V
- Ambient operating temperature -30˚ C to 40˚ C
- Automatic thermal self-protection
- Drivers have greater than 90% power factor and less than 10% THD
- Optional continuous dimming to 10% or dual circuitry available
- LED drivers have output power over-voltage, over-current protection and short circuit protection with auto recovery
- 1050 mA driver available with 90L configuration for increased lumen output
- LED electrical assembly, including PR devices, consumes no power in the 'off' state
- Surge protection of 10KA 8/20 µSec wave; clamping voltage of 320V & surge rating of 273J

Lumen maintenance:
- L90 at 60,000 hours (Projected per IESNA TM-21-11)

Installation:
- Two die-cast aluminum arm designs are available providing maximum design flexibility
- The decorative arm offers a sleek upswept look while the straight arm follows the housing's contoured lines for continuity of style
- Fixture ships with arm installed for ease of installation and mounts to #2 drill pattern
- Wall bracket, mast arm fitter and pole accessories are also available allowing easy mounting for virtually any application

Finish:
- TGIC thermoset polyester powder paint finish applied at nominal 2.5 mil thickness

Warranty:
Five year limited warranty (for more information visit: http://www.hubbelloutdoor.com/resources/warranty/

Listings:
- Listed to UL1598 and CSA C22.2#250.0-24 for wet locations
- Models meet DesignLights Consortium (DLC) qualifications, consult DLC website for more details: http://www.designlights.org/QPL
- IDA approved • IP65

PRODUCT IMAGE(S)

90 LED 3/4 VIEW

30 LED

60 LED

90 LED

DIMENSIONS

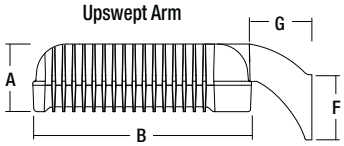

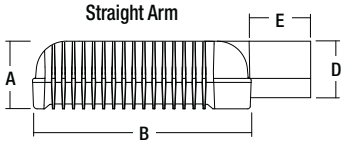

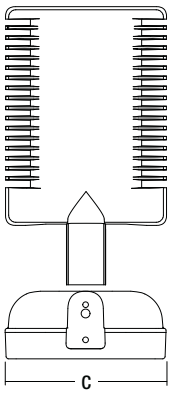

A	B	C	D	E	F	G
6 3/4" 171mm	21 3/4" 552mm	16" 406mm	6 5/8" 168mm	6 5/16" 160mm	5 5/8" 143mm	6 1/8" 155mm

CERTIFICATIONS/LISTINGS

ORDERING INFORMATION SEE NEXT PAGE

SPAULDING LIGHTING
Spaulding Lighting • 701 Millennium Boulevard • Greenville, SC 29607 • Phone: 864-678-1000
Due to our continued efforts to improve our products, product specifications are subject to change without notice.
© 2014 SPAULDING LIGHTING, All Rights Reserved • For more information visit our website: **www.spauldinglighting.com** • Printed in USA

ORDERING INFORMATION ORDERING EXAMPLE: CL1-A-90LU-5K-3-DB-RPA3

CL1 - A - 60L U - 4K - X - [ ] - DB - [ ]

SERIES

CL1 Cimarron LED

MOUNTING

A Arm mount construction (6" straight rigid arm included & acceptable for 90° configurations)

AD Decorative arm mount const. (6" decorative upswept arm incl. & acceptable for 90° configurations)

MAF Mast arm fitter for mounting to standard 2 3/8" mast arm bracket, includes 6" straight rigid arm

NO. OF LEDS

90L 90 High brightness LEDs

60L 60 High brightness LEDs

30L 30 High brightness LEDs

VOLTAGE

U[3] Universal 120V-277V, 50/60 Hz

1[7] 120V

2[7] 208V

3[7] 240V

4[7] 277V

5 480V, 60 Hz

F 347V, 60 Hz

E[4] 220V, 50 Hz

CCT

3K 3000K

4K 4200K

5K 5100K

AM[8] Amber (590 nm available for "Turtle Friendly" applications (consult factory)

DISTRIBUTION

2 Type II

3 Type III

4 Type IV

5M Type V Medium

5S Type V Short

5W Type V Wide

DRIVE CURRENT

Leave blank for 700mA (standard)

035 350mA Amber CCT only

105 1050 mA (use with 90L only for higher lumen output)

COLOR

DB Dark Bronze

BL Black

WH White

GR Gray

PS Platinum Silver

RD Red (premium color)

FG Forest Green (premium color)

CC Custom Color

OPTIONS

BC[6] Backlight control

BL[1,2,5] Bi-level control

CD[2] Continuous dimming

WB Wall bracket

RPA3 3" Round pole adapter

RPA4 4" Round pole adapter

RPA5 5" Round pole adapter

RPA6 6" Round pole adapter

F(X)[3,4] Fusing (replace X with voltage: 1-120V, 2-208V, 3-240V, 4-277V, 5-480V, 6-347V)

SSB Stainless steel LED bezel

VG Vandal guard

CONTROL OPTIONS

SCO Motion sensor On/Off control, No light output when no motion detected

SCP Programmable motion control, factory default is 50%

PR(X)[5] NEMA Photo cell receptacle (replace X with voltage: U=120-277, 5=480, 6 =347)

WIH[7] In-fixture wireless control module (120, 277, 347 & 480V)

Notes:
1- For BL option 90L and 60L; N/A 347V & 480V
2 - BL & CD cannot be combined
3 - Fuse option not available with universal voltage
4 - Select F3 fusing option for 220V
5 - Photocell receptacle not available with BL option
6 - Recommended for Type III and IV distributions only
7 - Select only when using voltage specific option (F or WIH)
8 - Available in 350mA drive current only Type IV, 5M

ENERGY SAVING DATA

ENERGY DATA	
Power Factor	>.9
Total Harmonic Distortion	<10%

LIGHT ENGINE	INPUT WATTS		LUMENS DELIVERED					
	120V-277V	347V-480V	TYPE 2	TYPE 3	TYPE 4	TYPE 5M	TYPE 5S	TYPE 5W
30L-5K	70	87	6384	6164	6641	7108	6999	6619
60L-5K	140	157	13300	12842	13125	13185	13675	12954
90L-5K	210	227	19684	19006	19202	20592	19610	18973
90L-5K-105	336	363	26974	25351	26548	25793	27445	25195
30L-4K	70	87	6089	6109	6104	6417	6439	6046
60L-4K	140	157	11583	11468	12036	12038	12581	11807
90L-4K	210	227	17143	16973	17648	18521	20220	17394
90L-4K-105	336	363	23896	23912	24199	24583	25357	23128
30L-3K	70	87	4606	4668	4686	4858	4902	4601
60L-3K	140	157	9013	9175	9216	9409	9461	8844
90L-3K	210	227	13360	13601	13575	13923	14004	13902
90L-3K-105	336	363	17645	17612	17469	17950	18271	17330

ACCESSORIES SEE NEXT PAGE

© 2014 SPAULDING LIGHTING, All Rights Reserved • For more information visit our website: **www.spauldinglighting.com** • Printed in USA

ACCESSORIES

Catalog Number	Description
CR-RPA3-XX[1]	Round pole adapter for straight arm (3¼ - 3¾”)
CR-RPA4-XX[1]	Round pole adapter for straight arm (3⅞ - 4½”)
CR-RPA5-XX[1]	Round pole adapter for straight arm (5”)
CR-RPA6-XX[1]	Round pole adapter for straight arm (6”)
CRD-RPA2-XX[1]	Round pole adapter for upswept arm (2¾ - 3⅛”)
CRD-RPA3-XX[1]	Round pole adapter for upswept arm (3¼ - 3¾”)
CRD-RPA4-XX[1]	Round pole adapter for upswept arm (3⅞ - 4½”)
CRD-RPA5-XX[1]	Round pole adapter for upswept arm (5”)
CRD-RPA6-XX[1]	Round pole adapter for upswept arm (6”)
WB-CR-XX[1]	Wall bracket
TPLB-XX[1]	Twin parallel luminaire bracket
MAF-CL-XX[3]	Horizontal mast arm fitter for 2 3/8” OD arm. Mounts to standard 6” arm (ordered with fixture)

1 Replace XX with color choice, eg.: DB for Dark Bronze
2 When ordering poles, specify Pole Drill Pattern #2
3 Fixture must include standard 6” arm

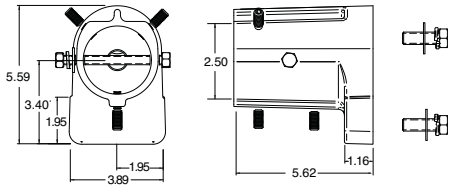

MAF – HORIZONTAL MAST ARM FITTER

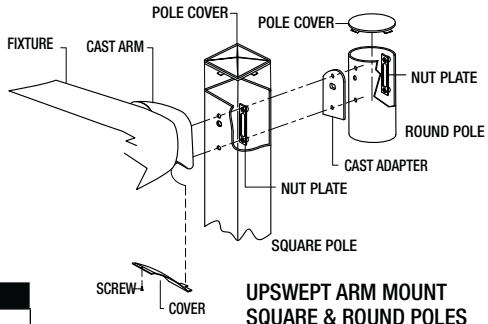

UPSWEPT ARM MOUNT
SQUARE & ROUND POLES

MOUNTING ACCESSORIES

Catalog Number	Description
ARM-CL-K-TA-XX[1]	Adjustable mounting arm for single fixture (2-3/8 tenon) – 5 lbs. 2.3 kgs.
ARM-CL-TK-TA-XX[1]	Adjustable mounting arm for two fixtures at 180˚ (2-3/8 tenon) – 7 lbs. 3.2 kgs.
ARM-CL-K-S-XX[1]	10” adjustable arm – .5 lbs. .05 kgs. – 5.75 lbs. 2.6 kgs.

1 Replace XX with color choice, eg.: DB for Dark Bronze
2 Fixture must include standard 6” straight arm

ARM-CL-K-TA-XX
ARM-CL-TK-TA-XX

ARM-CL-K-S-XX

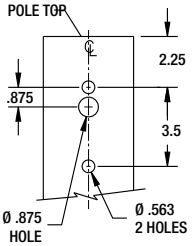

#2 DRILL PATTERN FOR POLES

TENON TOP POLE BRACKET ACCESSORIES

(2 3/8” OD tenon) (RSS version requires 4” round pole adapter)

Catalog Number	Description
SETA-XX[1]	Square pole tenon adapter (4 at 90 degrees)
RETA-XX[1]	Round pole tenon adapter (4 at 90 degrees)
TETA-XX[1]	Hexagonal pole tenon adapter (3 at 120 degrees)

1 Replace XX with color choice, eg.: DB for Dark Bronze

PHOTOCONTROL EQUIPMENT

Catalog Number	Description
PTL-1	Photocontrol - twist-lock cell (120V)
PTL-8	Photocontrol - twist-lock cell (120-277V)
PTL-5	Photocontrol - twist-lock cell (480V)
PTL-6	Photocontrol - twist-lock cell (347V)
PSC	Shorting cap - twist-lock

LIGHTING FACTS

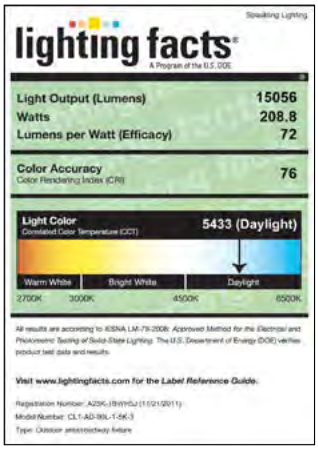

© 2014 SPAULDING LIGHTING, All Rights Reserved • For more information visit our website: **www.spauldinglighting.com** • Printed in USA

SQUARE NON-TAPERED STEEL (SS)

POLE SHAFT

The pole shaft is one piece construction, being fabricated from a weldable grade carbon steel structural tubing which has a uniform wall thickness of 11 gauge (0.1196"). The pole shaft material shall conform to ASTM A-500 Grade C with a minimum yield strength of 50,000 psi. The pole shaft has a full length longitudinal resistance weld and is uniformly square in cross-section with flat sides, small corner radii and excellent torsional properties.

BASE PLATE

The anchor base is fabricated from structural quality hot rolled carbon steel plate that meets or exceeds a minimum yield strength of 36,000 psi. The anchor base telescopes the pole shaft and is circumferentially welded top and bottom. All welds are performed in accordance with the American Welding Society specification AWS D1.1, latest edition.

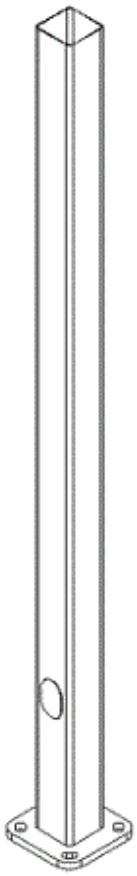

HANDHOLE

An oval reinforced gasketed handhole, having a nominal 3" x 5" inside opening, located 1'-6" above base, is standard on all poles. A grounding provision is located inside the handhole ring.

ANCHOR BOLT

Anchor bolts are fabricated from commercial quality hot rolled carbon steel bar that meets or exceeds a minimum yield strength of 55,000 psi. Four properly sized anchor bolts, each with two regular hex nuts and washers, are furnished and shipped with all poles unless otherwise specified. Anchor bolts shall have the threaded end galvanized a minimum of 8 inches in accordance with ASTM A-153. Fully galvanized anchor bolts are available upon request.

FINISH

Standard - All exterior metal surfaces are mechanically cleaned to remove all oxides and contaminants prior to coating. The standard finish is a polyester thermosetting powder coating applied to the surface of the substrate to a minimum of 3 mils for all color finishes. Galvanizing is available upon request.

AUTUMN RIDGE (PX)

SS4001120-BZ-DM10-BC

CATALOG LOGIC	CODE	EXPLANATION
Series:	SS	Square Non-Tapered Steel Poles
Base Diameter:	400	4.0" Base Bottom Diameter
Gauge:	11	11 gauge thickness
Nominal Height:	20	20 feet tall
Finish:	BZ	Bronze
Mounting Designation:	DM10	Drilled for 1 Luminaire
Options:	BC	Base Cover

HEIGHT (ft.)	POLE SHAFT (in.) x (ft.)	GAUGE	HANDHOLE SIZE (in.)	ANCHOR BOLT (in.) x (in.) x (in.)	BOLT CIRCLE (in.)
20	4.0 x 20.0	11	3" x 5"	0.75 x 17 x 3	8

EPA	80 MPH (ft.²)	90 MPH (ft.²)	100 MPH (ft.²)	WEIGHT	SHIP WT. (lbs.)
	12	9	6		151

LNC2 SERIES

Cat.# LNC2-XLU-4K-4-1

Job: AUTUMN RIDGE

Type: WX

HUBBELL® Outdoor Lighting

Approvals

SPECIFICATIONS

Intended Use:
The compact LED LNC2 is designed for perimeter illumination for safety, security and identity. This compact fixture has no uplight and is neighbor friendly with typical mounting height of up to 15ft. Units are supplied with an acrylic diffuser accessory that can be used for lower LED brightness near building entrances or other pedestrian areas. Units have protective polyester finish for long lasting appearance.

Construction:
Decorative die-cast aluminum housing protects components and provides an architectural appearance. Casting thermally conducts LED heat to provide optimum performance and long life. Powder paint finish provides durability in outdoor environments.

Electrical:
- 120V-277V universal voltage 50/60Hz dimmable drivers
- 347V and 480V dimmable driver option in 12L configuration
- Electronic drivers: One in 7L, 9L and 12L units Two drivers in 18L units
- Minimum operating temperature is -40˚C/-40˚F
- Driver RoHS and IP66
- Drivers have greater than .90 power factor and less than 20% Total Harmonic Distortion

LED(s) CCT:
- 3000K CCT nominal – 80 CRI, 4200K CCT nominal – 70 CRI, 5100K CCT nominal – 67 CRI
- 7 LEDs, 18 input watts, deliver 1389 lumens with 80 LPW efficiency at 5100K CCT
- 9 LEDs, 22 input watts, deliver 1745 lumens with 85 LPW efficiency at 5100K CCT
- 12 LEDs, 29 input watts, deliver 2420 lumens with 85 LPW efficiency at 5100K CCT
- 18 LEDs, 45 input watts, deliver 3311 lumens at 78 LPW efficiency at 5100K CCT

Egress:
- Battery backup option - 12L only for egress applications – provides 1 fc average over 16' L x 48' W at 11' mounting height (see page 3)

Optical:
Type II, III and IV distributions with zero uplight, individual PMMA acrylic lenses for wide lateral throw, maximum control and efficiency. Acrylic diffuser included where reduced LED brightness is desired.

Lumen Maintenance:
L96 at 60,000hrs (Projected per IESNA TM-21-11), see table on page 2 for all values.

Installation:
Quick-mount adapter provides easy installation to wall or to recessed junction boxes (4" square junction box). Gasket seal and secured by two Allen-head hidden fasteners for tamper resistance. Designed for direct j-box mount or conduit feed in single SKU. Conduit feed not available with BBU.

Listings:
- DLC Qualified, Consult DLC website for more details: http://www.designlights.org/QPL
- Listed to UL 1598 for use in wet locations, 40˚ C ambient environments

Options:
- Button photocontrol for dusk to dawn energy savings
- Integral Battery Backup (-20˚C to 30˚C) in 12L units

Warranty:
Five year limited warranty (for more information visit: http://www.hubbelloutdoor.com/resources/warranty/

- IES Progress Award Winner - 2013
- Building Operating Management 2014 Top Products Award - LNC2-18LU

PRODUCT IMAGE(S)

LNC2-12LU

LNC2-18LU

With diffuser

With Battery Backup - See Page 3

DIMENSIONS

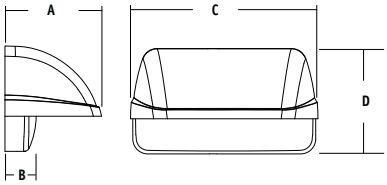

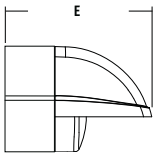

With Battery Backup

A	B	C	D	E	Weight / BBU
6.25"	1.6"	10.25"	5.6"	10.25"	7.0 / 15.0 lbs.
158.7 mm	40.2 mm	260.4 mm	142.2 mm	260.4 mm	3.2 / 6.8 kg

SHIPPING INFORMATION

Catalog Number	G.W(kg)/ CTN	Carton Dimensions			Carton Qty. per Master Pack
		Length Inch (cm)	Width Inch (cm)	Height Inch (cm)	
LNC2-12LU	14.3 (6.5)	14.5 (37)	11.4 (29)	8.4 (21.5)	2
LNC2-18LU	14.8 (6.7)	14.9 (38)	11.4 (29)	8.4 (21.5)	2

CERTIFICATIONS/LISTINGS

C US

ORDERING INFORMATION – ORDERING EXAMPLE: LNC2-12LU-5K-3-1

LNC2 - XLU - 4K - 4 - 1 -

SERIES
- **LNC2** Laredo LNC2

NUMBER OF LEDS/SOURCE/VOLTAGE
- **7LU** 7 LEDs, 18w input, Universal voltage 120-277V
- **9LU** 9 LEDs, 22w input, Universal voltage 120-277V
- **12LU** 12 LEDs, 29w input, Universal voltage 120-277V
- **18LU** 18 LEDs, 45w input, Universal voltage 120-277V
- **12L5** 12 LEDs, 29w input, 480V
- **12L6** 12 LEDs, 29w input, 347V

CCT
- **3K**[3] 3000K nominal 80 CRI
- **4K** 4200K nominal 70 CRI
- **5K** 5100K nominal 67 CRI
- **AM**[1] Amber (590 µm available for "Turtle Friendly"/observatory applications, 350 mA (consult factory)

IES DISTRIBUTION
- **2**[3] Type II
- **3** Type III
- **4** Type IV

FINISH
- **1** Bronze
- **2** Black
- **3** Gray
- **4** White
- **5** Platinum

OPTIONS
- **PC(X)** Button photo-control, replace X with voltage, specify 1-120V, 2-208V, 3-240V, 4-277V
- **BBU**[2] Integral battery for 120 or 277V rated for -20˚C to 30˚C

1 Amber LEDs only available on 18LU configurations, 350 mA only; Universal Voltage 120V-277V
2 Battery backup only available 12L models, not available for Canada
3 Does not qualify for DLC

REPLACEMENT PART

CATALOG NUMBER	DESCRIPTION
93044013	Frosted comfort shield, improved uniformity with only 5% reduction

HUBBELL® Outdoor Lighting
Hubbell Outdoor Lighting • 701 Millennium Boulevard • Greenville, SC 29607 • Phone: 864-678-1000
Due to our continued efforts to improve our products, product specifications are subject to change without notice.
© 2014 HUBBELL OUTDOOR LIGHTING, All Rights Reserved • For more information visit our website: **www.hubbelloutdoor.com** • Printed in USA

PHOTOMETRICS

Without acrylic diffuser
LNC2-12LU-5K-3.IES

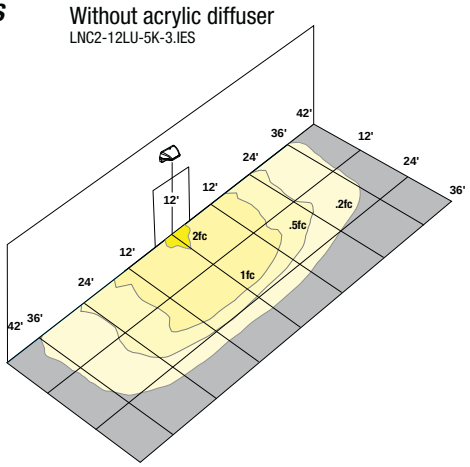

Without acrylic diffuser
LNC2-18LU-5K-3.IES

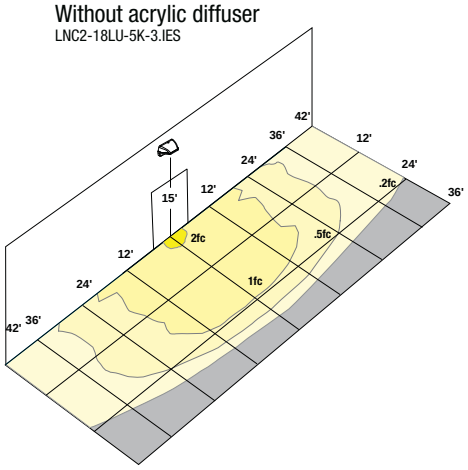

PERFORMANCE DATA

				5K (5100K nominal, 67 CRI)					4K (4200K nominal, 70 CRI)					3K (3000K nominal, 70 CRI)				
# OF LEDS	DRIVE CURRENT	SYSTEM WATTS	DIST. TYPE	LUMENS	LPW[1]	B	U	G	LUMENS	LPW[1]	B	U	G	LUMENS	LPW[1]	B	U	G
7	STD. (700mA)	18W	3	1389	80	0	0	1	1421	82	0	0	1	1046	60	0	0	1
			4	1441	83	0	0	1	1428	82	0	0	1	1071	62	0	0	1
9		22W	3	1745	85	0	0	1	1768	86	0	0	1	1310	64	0	0	1
			4	1806	88	0	0	1	1772	86	0	0	1	1317	64	0	0	1
12		28.6w	3	2420	85	1	0	1	2246	79	0	0	1	1824	64	0	0	1
			4	2485	87	0	0	1	2291	80	0	0	1	1776	62	0	0	1
18		44.5w	3	3311	74	1	0	1	3069	69	1	0	1	2522	57	1	0	1
			4	3602	81	1	0	1	3225	72	1	0	1	2518	57	0	0	1

Lumen values are from photometric tests performed in accordance with IESNA LM-79-08. Data is considered to be representative of the configurations shown. Actual performance may differ as a result of end-user environment and application.

PROJECTED LUMEN MAINTENANCE

	OPERATING HOURS					
Ambient Temp.	0	25,000	50,000	TM-21-11[1] L96 60,000	100,000	L70 (hours)
25°C / 77°F	1.00	0.98	0.97	0.96	0.95	>791,000
40°C / 104°F	0.99	0.98	0.96	0.96	0.94	>635,000

1. Projected per IESNA TM-21-11 * (Nichia 219B, 700mA, 85°C Ts, 10,000hrs)
Data references the extrapolated performance projections for the LNC-12LU-5K base model in a 40°C ambient, based on 10,000 hours of LED testing per IESNA LM-80-08.

LUMINAIRE AMBIENT TEMPERATURE FACTOR (LATF)

AMBIENT TEMPERATURE		LUMEN MULTIPLIER
0° C	32° F	1.02
10° C	50° F	1.01
20° C	68° F	1.00
25° C	77° F	1.00
30° C	86° F	1.00
40° C	104° F	0.99

Use these factors to determine relative lumen output for average ambient temperatures from 0-40°C (32-104°F).

ELECTRICAL DATA

# OF LEDS	DRIVE CURRENT (mA)	INPUT VOLTAGE (V)	CURRENT (Amps)	SYSTEM POWER (w)
7	STD. (700mA)	120	–	18
		277	–	18
9		120	0.183	22
		277	0.09	22.1
12		120	0.24	28.9
		277	0.10	27.7
		347	0.10	33.7
		480	0.06	28.9
18		120	0.35	41.0
		277	0.15	41.5
18 Amber		120	2.68	32.0

© 2014 HUBBELL OUTDOOR LIGHTING, All Rights Reserved • For more information visit our website: **www.hubbelloutdoor.com** • Printed in USA

LNC2 – BATTERY BACK UP

Side View

3/4 View

Multi Unit	1 fc Average	1 fc Minimum
Length	16'	15'
Width	112'	68'

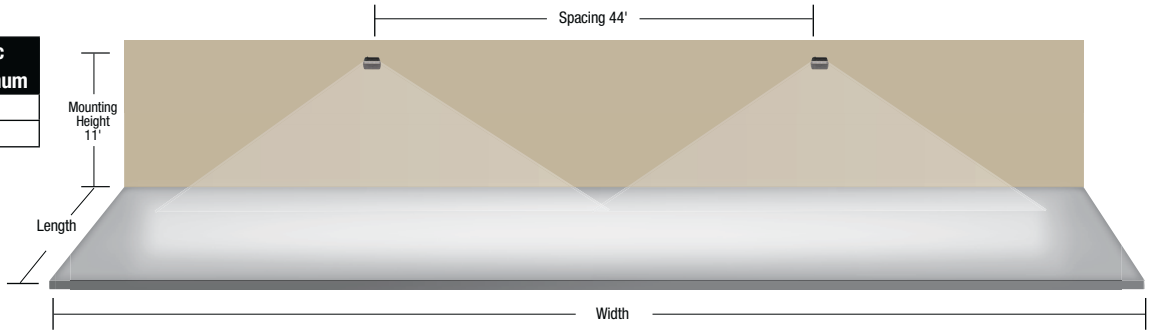

Single Unit	1 fc Average	1 fc Minimum
Length	16'	15'
Width	48'	24'

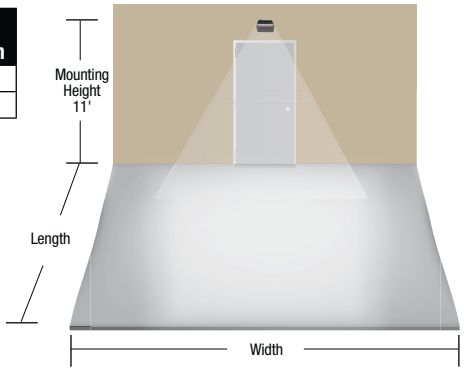

Provides Life Safety Code average illuminance of 1.0 fc. Assumes open space with no obstructions and mounting height of 11'
Diagrams for illustration purposes only, please consult factory for application layout.

LIGHTING FACTS

LNC2-12LU-4K-3

LNC2-18LU-4K-3

LNC2-18LU-5K-3

© 2014 HUBBELL OUTDOOR LIGHTING, All Rights Reserved • For more information visit our website: **www.hubbelloutdoor.com** • Printed in USA